TIFAS® bulb-tite blind rivets

The outstanding feature of TIFAS® bulb-tite blind rivets is their clamp strength. During the installation process, three star-shaped legs are formed on the blind side to create a wide, blind side footprint big enough to cover even large drilled hole tolerances. This feature makes TIFAS® bulb-tite blind rivets suitable for materials with deviating thicknesses and uneven surfaces as well as for soft and thin material. The high shear strength and secure (vibration-resistant) retention of the mandrel sets the TIFAS® bulb-tite blind rivet apart from other blind side folding leg rivets (large grip range, clamp force distribution across a large area). Versions with a pre-fitted neoprene washer can also be used for airtight and watertight rivet applications.

Installation is also possible on offset drilled holes so long as the rivet head can be pushed through.
With the aid of a blind rivet installation tool fitted with a special nose piece, the installed blind rivets are mechanically secured and annular. Blind rivet installation tools with a suitable range of performance and fitted with a special nose piece are required. TIFAS® bulb-tite blind rivets have long since proven their worth as the ideal fastener in roof and facade construction as well as bodywork and vehicle construction.

Large grip range

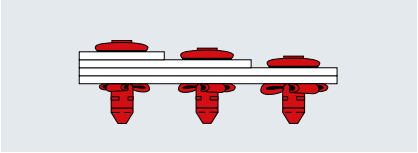

High clamp force

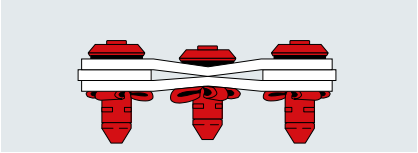

Curved mating surfaces

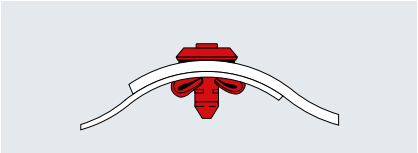

Benefits at a glance

- Universal use
- Mandel remains secured; the mandrel always snaps off at the same position or inside the rivet head.
- Large grip range reduces storage needs
- Corrosion-resistant – aluminium and galvanised steel rivets
- Watertight in combination with a neoprene washer
- Ideal for hard/soft connections
- Large blind-side footprint
- Quick and secure installation
- Permanent secure fixing
- Heatless installation means component will not warp
- Eliminates extensive refinishing
- Combines various materials such as metals and plastics
- Ideal for lightweight constructions
- One-sided installation. No back access required
- Securely retained mandrel ensures spent mandrel is very snugly fitted inside the installed rivet
- Shock-proof through patented rivet installation
- Little to no bearing pressure, resulting in no damage to hole surface
- Versatile use on flat or curved surfaces
- Special designs can be manufactured for larger order volumes

Applications

- General industry
- Automotive industry
- Bodywork and vehicle manufacture
- Construction industry, especially roof and facade construction

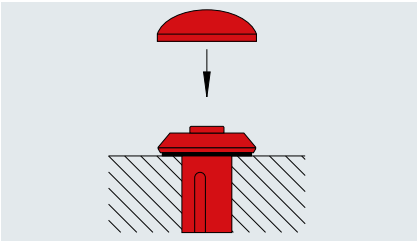

Coloured plastic caps

Matching plastic caps in numerous RAL colours are available for TIFAS® bulb-tite blind rivets. TIFAS® bulb-tite blind rivets can also be supplied with powder-coated or varnished heads, including in a desired RAL colour.

Miscellaneous

- General building control approval No. Z-14.1-4 Annex 2.10 and Z-14.1-537
- A special nose piece is required for installation.

1.

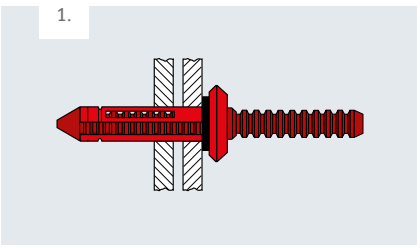

2.

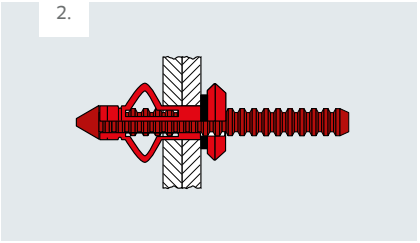

3.

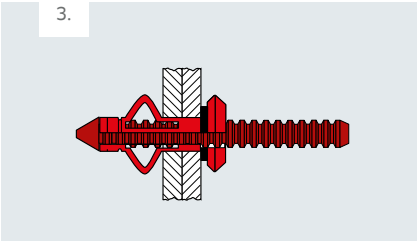

4.

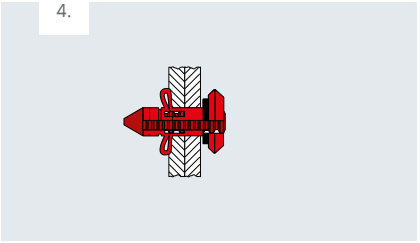

TIFAS® bulb-tite blind rivets

Flat head with neoprene washer

Material

Sleeve
Aluminium AlMg 5, waxed

Mandrel
Aluminium AlCuMg 1, waxed

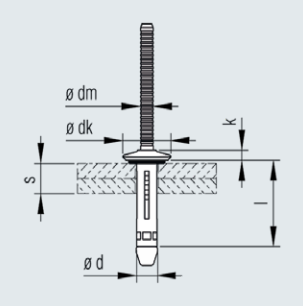

Nominal ø d [mm]	Bore ø [mm]	Grip range s [mm]	Blind sleeve l ±0.5 [mm]	Blind rivet head ø dk ±0.4 [mm]	Height k max [mm]	Mandrel ø dm nom. [mm]	Nominal strength at break* Shear N	Nominal strength at break* Tensile N	Article No.
4.1	4.2	1.7 - 6.4	20.3	8.9	2.6	2.4	1550	1000	410 002 000
		6.4 - 12.7	25.1	8.9	2.6	2.4	1550	1000	410 003 000
5.2	5.3 - 5.5	1.3 - 4.7	17.5	11.6	3.2	2.9	2700	1900	410 008 000
		2.7 - 6.4	19.1	11.6	3.2	2.9	2700	1900	410 009 000
		4.7 - 9.5	22.2	11.6	3.2	2.9	2700	1900	410 010 000
		7.9 - 12.7	25.4	11.6	3.2	2.9	2700	1900	410 011 000
		11.1 - 15.9	28.6	11.6	3.2	2.9	2700	1900	410 012 000
		14.3 - 19.1	31.8	11.6	3.2	2.9	2700	1900	410 013 000

* Strengths at break relate to rivet failure

* DIBT approval no. Z-14.1-4

Matching plastic caps in a variety of colours available on request for TIFAS® folding leg blind rivets.

Blind rivet installation tools with a suitable range of performance and fitted with a special nose piece required.

Other designs available on request.

TIFAS® bulb-tite blind rivets

Flat head without neoprene washer

Material

Sleeve
Aluminium AlMg 5, waxed

Mandrel
Aluminium AlCuMg 1, waxed

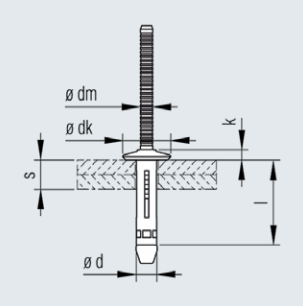

Nominal ø d [mm]	Bore ø [mm]	Grip range s [mm]	Blind sleeve l ±0.5 [mm]	Blind rivet head ø dk ±0.4 [mm]	Height k max [mm]	Mandrel ø dm nom. [mm]	Nominal strength at break* Shear N	Nominal strength at break* Tensile N	Article No.
4.1	4.2	1.7 - 6.4	20.3	8.9	2.6	2.4	1550	1000	410 032 000
		6.4 - 12.7	25.1	8.9	2.6	2.4	1550	1000	410 033 000
5.2	5.3 - 5.5	1.3 - 4.7	17.5	11.6	3.2	2.9	2700	1900	410 038 000
		2.7 - 6.4	19.1	11.6	3.2	2.9	2700	1900	410 039 000
		4.7 - 9.5	22.2	11.6	3.2	2.9	2700	1900	410 040 000
		7.9 - 12.7	25.4	11.6	3.2	2.9	2700	1900	410 041 000
		11.1 - 15.9	28.6	11.6	3.2	2.9	2700	1900	410 042 000
		14.3 - 19.1	31.8	11.6	3.2	2.9	2700	1900	410 043 000

* Strengths at break relate to rivet failure

* DIBT approval no. Z-14.1-4

Matching plastic caps in a variety of colours available on request for TIFAS® folding leg blind rivets.

Blind rivet installation tools with a suitable range of performance and fitted with a special nose piece required.

Other designs available on request.

TIFAS® bulb-tite blind rivets

Truss head with neoprene washer

Material

Sleeve
Aluminium AlMg 5,
waxed

Mandrel
Aluminium AlCuMg 1,
waxed

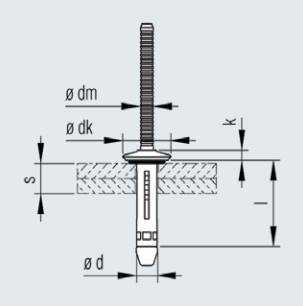

Nominal ø d [mm]	Bore ø [mm]	Grip range s [mm]	Blind sleeve l ±0.5 [mm]	Blind rivet head ø dk ±0.4 [mm]	Height k max [mm]	Mandrel ø dm nom. [mm]	Nominal strength at break* Shear N	Tensile N	Article No.
6.3	6.4 - 6.6	3.2 - 9.5	23.40	14.0	3.9	3.9	4200	2500	410 022 000
		6.4 - 12.7	26.50	14.0	3.9	3.9	4200	2500	410 023 000
		9.5 - 15.8	29.70	14.0	3.9	3.9	4200	2500	410 024 000

* Strengths at break relate to rivet failure

Matching plastic caps in a variety of colours available on request for TIFAS® folding leg blind rivets.

Blind rivet installation tools with a suitable range of performance and fitted with a special nose piece required.

Other designs available on request.

TIFAS® bulb-tite blind rivets

Truss head without neoprene washer

Material

Sleeve
Aluminium AlMg 5, waxed

Mandrel
Aluminium AlCuMg 1, waxed

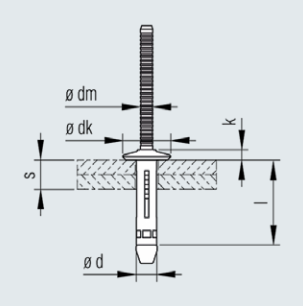

Nominal ø d [mm]	Bore ø [mm]	Grip range s [mm]	Blind sleeve l ±0.5 [mm]	Blind rivet head ø dk ±0.4 [mm]	Height k max [mm]	Mandrel ø dm nom. [mm]	Nominal strength at break* Shear N	Nominal strength at break* Tensile N	Article No.
6.3	6.4 - 6.6	3.2 - 9.5	23.40	14.0	3.9	3.9	4200	2500	410 052 000
		6.4 - 12.7	26.50	14.0	3.9	3.9	4200	2500	410 053 000
		9.5 - 15.8	29.70	14.0	3.9	3.9	4200	2500	410 054 000

* Strengths at break relate to rivet failure

Matching plastic caps in a variety of colours available on request for TIFAS® folding leg blind rivets.

Blind rivet installation tools with a suitable range of performance and fitted with a special nose piece required.

Other designs available on request.

TIFAS® bulb-tite blind rivets

Truss head with neoprene washer

Material

Sleeve
Steel, galvanised, waxed

Mandrel
Steel, galvanised, waxed

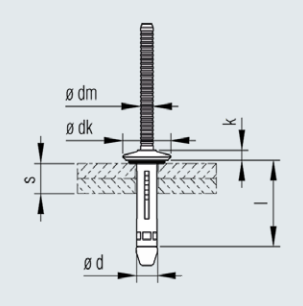

Nominal ø d [mm]	Bore ø [mm]	Grip range s [mm]	Blind sleeve l ±0.5 [mm]	Blind rivet head ø dk ±0.4 [mm]	Height k max [mm]	Mandrel ø dm nom. [mm]	Nominal strength at break* Shear N	Nominal strength at break* Tensile N	Article No.
6.3	6.4 - 6.6	1.0 - 6.4	20.2	14	3.9	3.9	5500	4200	410 120 000
		3.2 - 9.5	23.4	14.0	3.9	3.9	5500	4200	410 121 000
		6.4 - 12.7	26.5	14.0	3.9	6.3	5500	4200	410 122 000
		9.5 - 15.8	29.7	14.0	3.9	6.3	5500	4200	410 123 000

* Strengths at break relate to rivet failure

Blind rivet installation tools with a suitable range of performance and fitted with a special nose piece required.

Other designs available on request.

TIFAS® bulb-tite blind rivets

Truss head without neoprene washer

Material

Sleeve
Steel, galvanised, waxed

Mandrel
Steel, galvanised, waxed

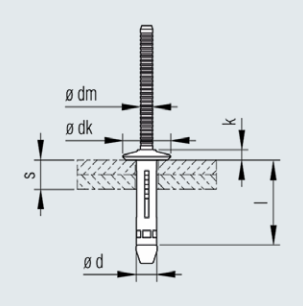

Nominal ø d [mm]	Bore ø [mm]	Grip range s [mm]	Blind sleeve l ±0.5 [mm]	Blind rivet head ø dk ±0.4 [mm]	Height k max [mm]	Mandrel ø dm nom. [mm]	Nominal strength at break* Shear N	Nominal strength at break* Tensile N	Article No.
6.3	6.4 - 6.6	1.0 - 6.4	20.2	14	3.9	3.9	5500	4200	410 150 000
		3.2 - 9.5	23.4	14.0	3.9	3.9	5500	4200	410 151 000
		6.4 - 12.7	26.5	14.0	3.9	6.3	5500	4200	-
		9.5 - 15.8	29.7	14.0	3.9	6.3	5500	4200	-

* Strengths at break relate to rivet failure

Blind rivet installation tools with a suitable range of performance and fitted with a special nose piece required.

Other designs available on request.