Closing plate

Coding: 2430.00

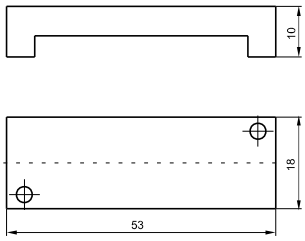

Weight 20 g

Diaphragm plug

Coding: 2430.17

Weight 5 g

Pneumatic - Spring

Coding: 2445.52.00.19

Operational characteristics	
Fluid	Filtered air. No lubrication needed, if applied it shall be continuous
Max working pressure (bar)	10
Pressure range (bar)	2
Temperature °C	-5 ÷ +50
Flow rate at 6 bar with Δp=1 (Nl/min)	550
Orifice size (mm)	5

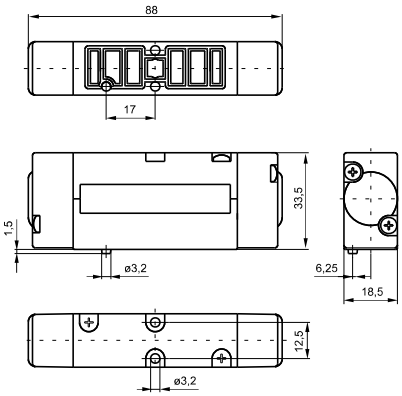

Weight 155 g

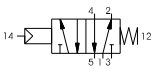

Pneumatic - Differential

Coding: 2445.52.00.16

Operational characteristics	
Fluid	Filtered air. No lubrication needed, if applied it shall be continuous
Max working pressure (bar)	10
Maximum piloting pressure (bar)	2
Temperature °C	-5 ÷ +50
Flow rate at 6 bar with Δp=1 (Nl/min)	550
Orifice size (mm)	5

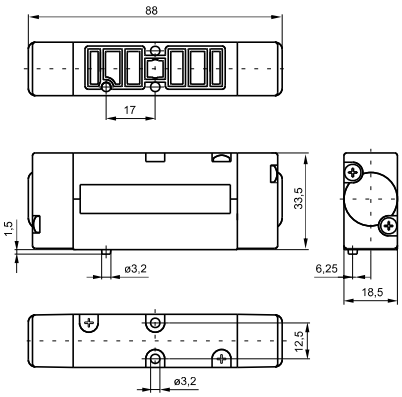

Weight 155 g

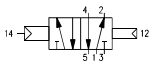

Pneumatic - Differential (External)

Coding: 2445.52.00.17

Operational characteristics	
Fluid	Filtered air. No lubrication needed, if applied it shall be continuous
Max working pressure (bar)	10
Maximum piloting pressure (bar)	2
Temperature °C	-5 ÷ +50
Flow rate at 6 bar with Δp=1 (Nl/min)	550
Orifice size (mm)	5

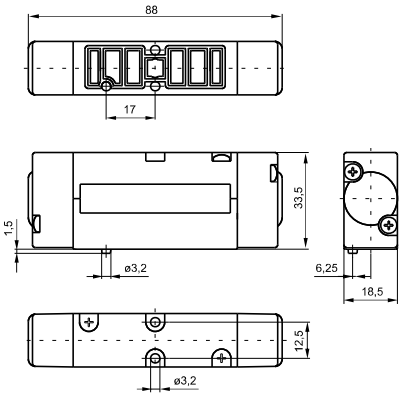

Weight 155 g

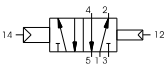

Pneumatic - Pneumatic

Coding: 2445.52.00.18

Operational characteristics	
Fluid	Filtered air. No lubrication needed, if applied it shall be continuous
Max working pressure (bar)	10
Maximum piloting pressure (bar)	1.5
Temperature °C	-5 ÷ +50
Flow rate at 6 bar with Δp=1 (Nl/min)	550
Orifice size (mm)	5

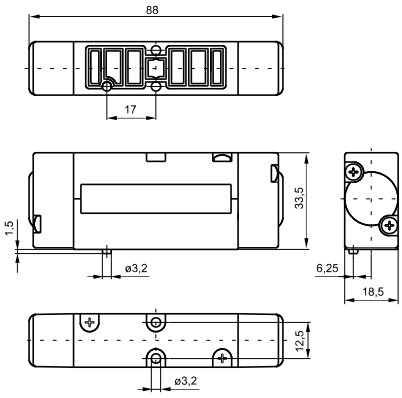

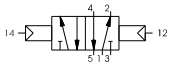

Weight 155 g

Solenoid-Spring / Differential

Coding: 244Ⓒ.52.00.Ⓥ.Ⓣ

Operational characteristics	
Fluid	Filtered air. No lubrication needed, if applied it shall be continuous
Max working pressure (bar)	10
Maximum piloting pressure (bar)	2
Temperature °C	-5 ÷ +50
Flow rate at 6 bar with Δp=1 (Nl/min)	550
Orifice size (mm)	5

Ⓒ	TYPE ELECTROPILOT EXHAUST
	1 = on base (only for self feeding valves)
	5 = on pilot (for all version)
Ⓥ	VERSION
	39 = Solenoid - Spring
	29 = Solenoid external-Spring
	36 = Solenoid-Differential
	37 = Solenoid-Differerential external
	26 = Solenoid external-Differerential
	27 = Solenoid external-Differerential external
Ⓣ	VOLTAGE
	01 = 12V DC
	02 = 24V DC
	05 = 24V AC
	06 = 110V AC
	07 = 230 V AC
	08 = 24V DC 1W
	09 = 24V DC downward
	11 = 12V DC downward
	12 = 24V DC downward
	15 = 24V AC downward
	16 = 110V AC downward
	17 = 230 V AC downward
	18 = 24V DC 1W downward
	19 = 24V DC Earth faston downward

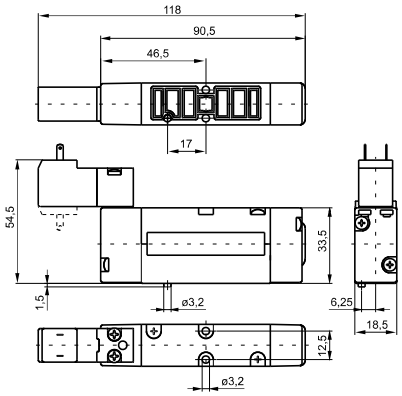

Weight 190 g

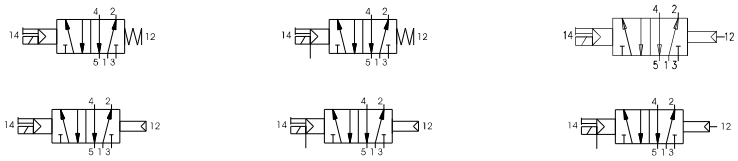

Solenoid - Solenoid

Coding: 244Ⓒ.52.00.Ⓥ.Ⓣ

Operational characteristics	
Fluid	Filtered air. No lubrication needed, if applied it shall be continuous
Max working pressure (bar)	10
Maximum piloting pressure (bar)	1.5
Temperature °C	-5 ÷ +50
Flow rate at 6 bar with Δp=1 (Nl/min)	550
Orifice size (mm)	5

Ⓒ	TYPE ELECTROPILOT EXHAUST
	1 = on base (only for self feeding valves)
	5 = on pilot (for all version)
Ⓥ	VERSION
	24 = Solenoid external-Solenoid external
	35 = Solenoid-Solenoid
Ⓣ	VOLTAGE
	01 = 12V DC
	02 = 24V DC
	05 = 24V AC
	06 = 110V AC
	07 = 230 V AC
	08 = 24V DC 1W
	09 = 24V DC downward
	11 = 12V DC downward
	12 = 24V DC downward
	15 = 24V AC downward
	16 = 110V AC downward
	17 = 230 V AC downward
	18 = 24V DC 1W downward
	19 = 24V DC Earth faston downward

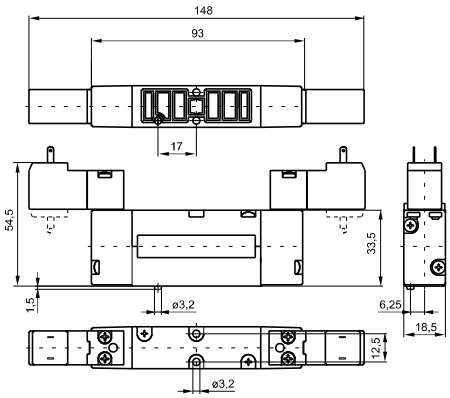

Weight 225 g

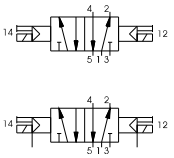

Pneumatic - Pneumatic 5 ways 3 connections

Coding: 244Ⓒ.53.Ⓕ.18

Operational characteristics	
Fluid	Filtered air. No lubrication needed, if applied it shall be continuous
Max working pressure (bar)	10
Maximum piloting pressure (bar)	3
Temperature °C	-5 ÷ +50
Flow rate at 6 bar with Δp=1 (Nl/min)	550
Orifice size (mm)	5

Ⓒ	TYPE ELECTROPILOT EXHAUST
	1 = on base (only for self feeding valves)
	5 = on pilot (for all version)
Ⓕ	FUNCTION
	31 = Closed centres
	32 = Open centres
	33 = Pressured centres

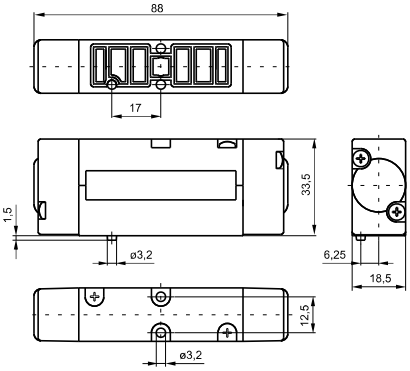

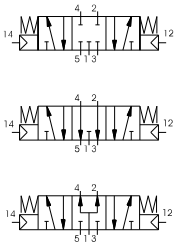

Weight 165 g

Solenoid - Solenoid 5 ways 3 connections

Coding: 244Ⓒ.53.Ⓕ.Ⓥ.Ⓣ

Operational characteristics	
Fluid	Filtered air. No lubrication needed, if applied it shall be continuous
Max working pressure (bar)	10
Maximum piloting pressure (bar)	3
Temperature °C	-5 ÷ +50
Flow rate at 6 bar with Δp=1 (Nl/min)	550
Orifice size (mm)	5

Ⓒ	TYPE ELECTROPILOT EXHAUST
	1 = on base (only for self feeding valves)
	5 = on pilot (for all version)
Ⓕ	FUNCTION
	31 = Closed centres
	32 = Open centres
	33 = Pressured centres
Ⓥ	VERSION
	24 = Solenoid external-Solenoid external
	35 = Solenoid-Solenoid
Ⓣ	VOLTAGE
	01 = 12V DC
	02 = 24V DC
	05 = 24V AC
	06 = 110V AC
	07 = 230 V AC
	08 = 24V DC 1W
	09 = 24V DC downward
	11 = 12V DC downward
	12 = 24V DC downward
	15 = 24V AC downward
	16 = 110V AC downward
	17 = 230 V AC downward
	18 = 24V DC 1W downward
	19 = 24V DC Earth faston downward

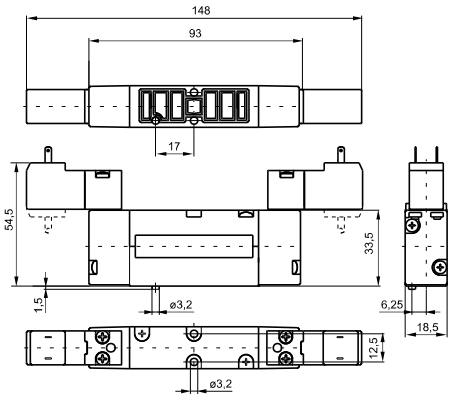

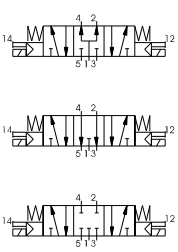

Weight 235 g

Pneumatic-Pneumatic 2 x 3/2

Coding: 2445.62.Ⓕ.18

Operational characteristics	
Fluid	Filtered air. No lubrication needed, if applied it shall be continuous
Max working pressure (bar)	10
Maximum piloting pressure (bar)	≥1,5+(0,2xInlet pressure)
Temperature °C	-5 ÷ +50
Flow rate at 6 bar with Δp=1 (Nl/min)	450
Orifice size (mm)	5

	FUNCTION
Ⓕ	**44** = 2 Coils 3/2 NC
	45 = 1 Coil 3/2 NC (14) + 1 Coil 3/2 NO (12)
	55 = 2 Coils 3/2 NO
	54 = 1 Coil 3/2 NO (14) + 1 Coil 3/2 NC (12)

*Example: if inlet pressure is set at 5bar then pilot pressure must be at least Pp=1,5+(0.2*5)=2,5bar*

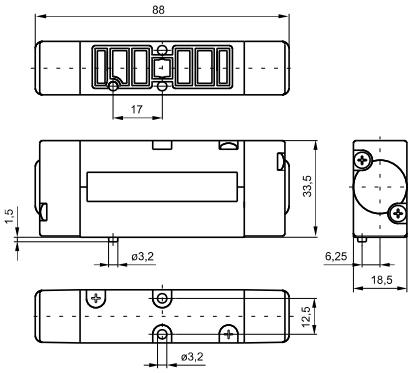

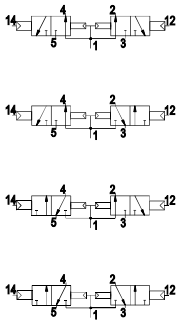

Weight 170 g

Solenoid - Solenoid 2 x 3/2

Coding: 2445.62.Ⓕ.35.Ⓣ

Operational characteristics	
Fluid	Filtered air. No lubrication needed, if applied it shall be continuous
Max working pressure (bar)	10
Maximum piloting pressure (bar)	≥1,5+(0,2xInlet pressure)
Temperature °C	-5 ÷ +50
Flow rate at 6 bar with Δp=1 (Nl/min)	450
Orifice size (mm)	5

	FUNCTION
Ⓕ	**44** = 2 Coils 3/2 NC
	45 = 1 Coil 3/2 NC (14) + 1 Coil 3/2 NO (12)
	55 = 2 Coils 3/2 NO
	54 = 1 Coil 3/2 NO (14) + 1 Coil 3/2 NC (12)

	VOLTAGE
Ⓣ	**01** = 12V DC
	02 = 24V DC
	05 = 24V AC
	06 = 110V AC
	07 = 230 V AC
	08 = 24V DC 1 Watt
	09 = 24V DC downward
	11 = 12V DC downward
	12 = 24V DC downward
	15 = 24V AC downward
	16 = 110V AC downward
	17 = 230 V AC downward
	18 = 24V DC 1 Watt downward
	19 = 24V DC Earth faston downward

*Example: if inlet pressure is set at 5bar then pilot pressure must be at least Pp=1,5+(0.2*5)=2,5bar*

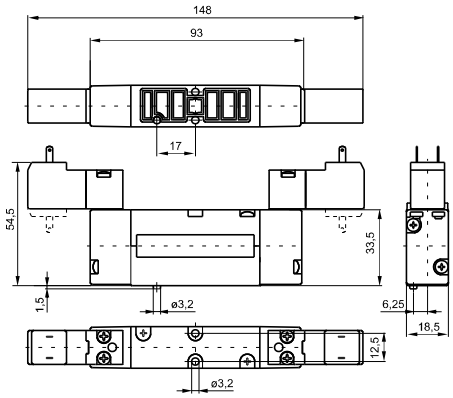

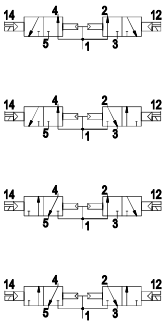

Weight 250 g

Modular base

Coding: 2440.Ⓥ

Ⓥ	VERSION
	01 = Modular base
	06 = Supply and exhaust closed
	07 = Supply closed
	08 = Exhaust closed

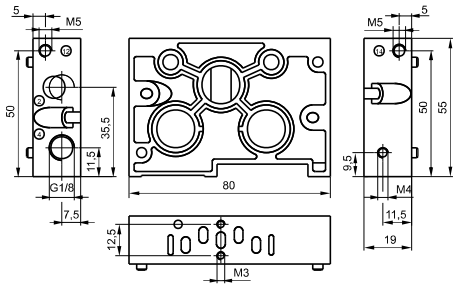

Inlet base

Coding: 2440.Ⓥ

Ⓥ	VERSION
	02 = Right
	03 = Left

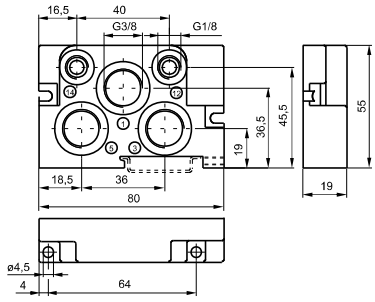

Weight 110 g

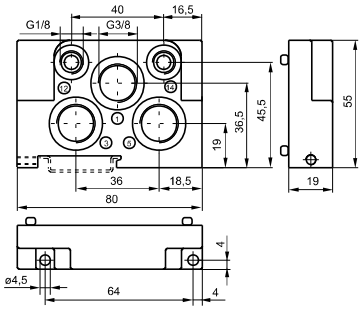

Weight 110 g

Intermediate air intake

Coding: 2440.10

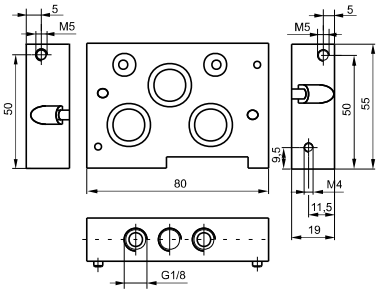

Weight 185 g

Closing plate

Coding: 2440.00

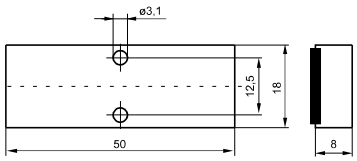

Weight 25 g

Diaphragm plug

Coding: 2440.17

The integral electrical design for the series 2400 valve is extremely flexible, allowing the production of pre-wired solenoid valve manifolds, the configuration of which can be determined at the point of assembly. The 24 VDC, 12 VDC (equivalent PNP) and 24 VAC* modules are available with 2 or 4 positions. The system assembled is designed for an IP40 protection. IP65 is available on request.

* Attention : If the working tension is 24 VAC DO NOT using modules with protection diode

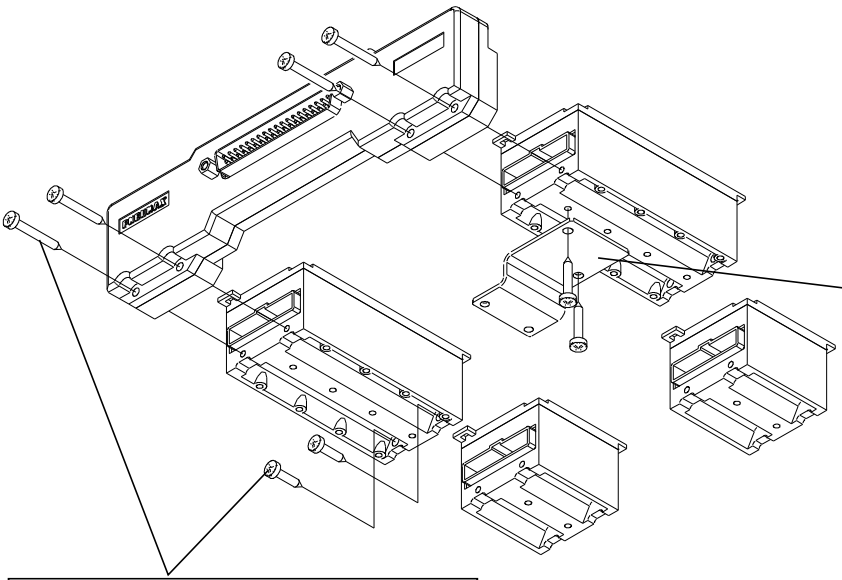

Support plates are supplied to mount the electrical connection elements to the manifold modules. Individual valves can still be removed from the manifold even after assembly is complete. One support plate is required per element.

The elements connect together using an upper coupling and lower fixing screw.

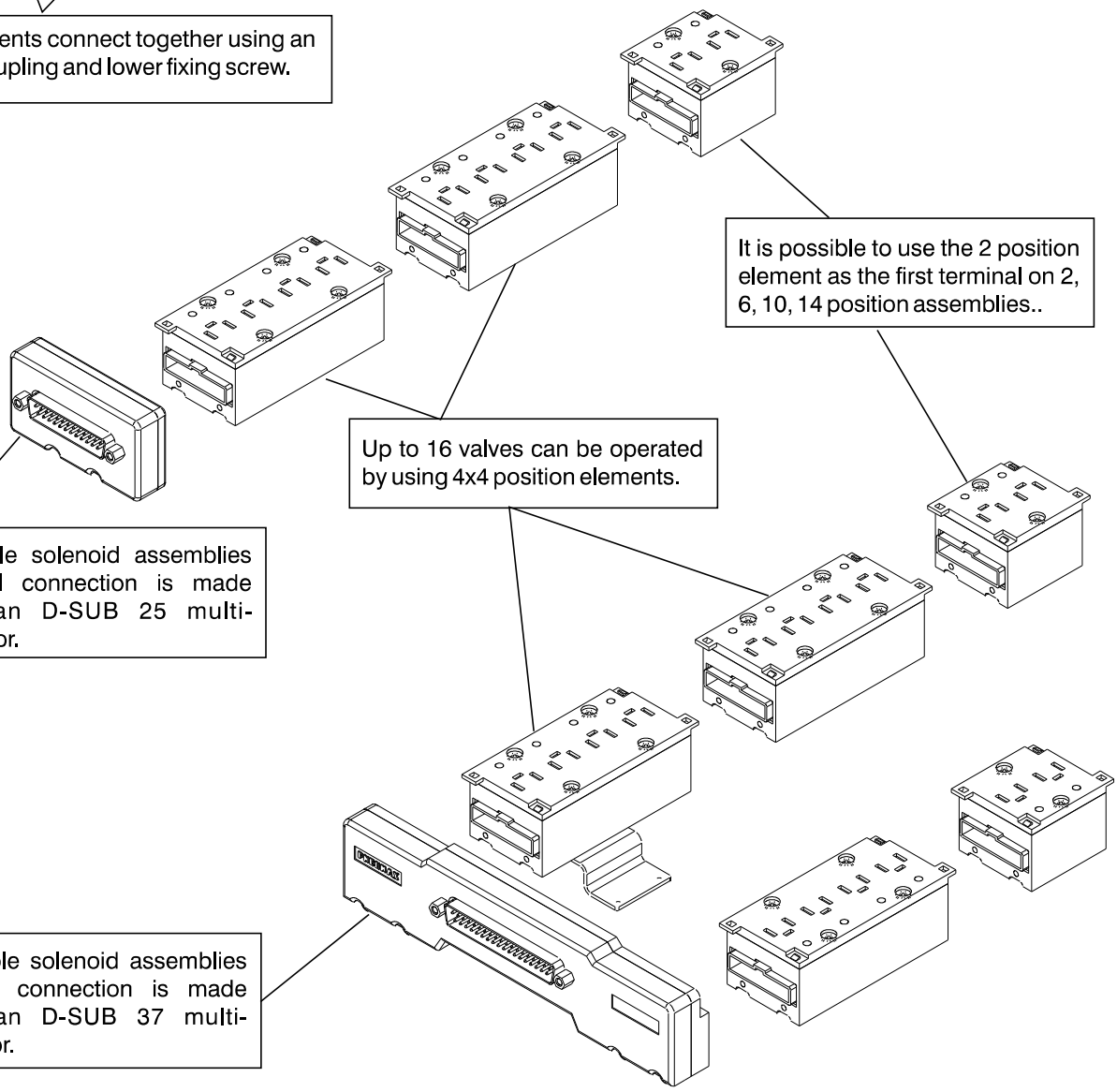

It is possible to use the 2 position element as the first terminal on 2, 6, 10, 14 position assemblies..

Up to 16 valves can be operated by using 4x4 position elements.

On single solenoid assemblies electrical connection is made using an D-SUB 25 multi-connector.

On double solenoid assemblies electrical connection is made usinfg an D-SUB 37 multi-connector.

Module for connections

Coding: 2400.Ⓟ.Ⓣ

Ⓟ	POSITIONS
	04 = 4 positions
	02 = 2 positions
Ⓣ	TYPE
	00 = Left IP40-PNP
	02 = Left IP40-PNP with protection diode
	10 = Left IP65-PNP
	12 = Left IP65-PNP with protection diode
	01 = Right IP40-PNP
	03 = Right IP40-PNP with protection diode
	11 = Right IP65-PNP
	13 = Right IP65-PNP with protection diode

Weight 30 g
* only for VDC

2400.02.Ⓣ

Weight 50 g
* only for VDC

2400.04.Ⓣ

Front connector IP65

Coding: 2400.Ⓟ.10

Ⓟ	POLES
	37 = 37 poles
	25 = 25 poles

Weight 120 g
The IP65 protection is obtained by IP65 Pneumax cable

2400.37.10

Weight 40 g
The IP65 protection is obtained by IP65 Pneumax cable

2400.25.10

Plug

Coding: 2400.00

Weight 5 g

Closing plate electrical positions

Coding: 2400.15.00

Weight 2 g

VDMA support plate

Coding: 2440.50

Weight 20 g

FLAT support plate

Coding: 2430.50

Weight 20 g

4 positions box with 25 contacts connector

Coding: 2400.04.25

Weight 65 g

15mm male connector with 2 metres cable

Coding: 2400.15.02

Weight 98 g

In line cable complete with connector IP40

Coding: 2400.Ⓣ.Ⓛ.00

Ⓣ	CONNECTORS
	25 = 25 poles
	37 = 37 poles
Ⓛ	CABLE LENGTH
	03 = 3 meters
	05 = 5 meters
	10 = 10 meters

2400.Ⓣ.Ⓛ.00

Cable complete with connector, 25 Poles IP65

Coding: 2300.25.Ⓛ.Ⓒ

Ⓛ	CABLE LENGTH
	03 = 3 meters
	05 = 5 meters
	10 = 10 meters
Ⓕ	FUNCTION
	31 = Closed centres
	32 = Open centres
	33 = Pressured centres

Cable complete with connector, 37 Poles IP65

Coding: 2400.37.Ⓛ.Ⓒ

Ⓛ	CABLE LENGTH
	03 = 3 meters
	05 = 5 meters
	10 = 10 meters
Ⓕ	FUNCTION
	31 = Closed centres
	32 = Open centres
	33 = Pressured centres

SUB-D 25 CONTACTS CONNECTOR

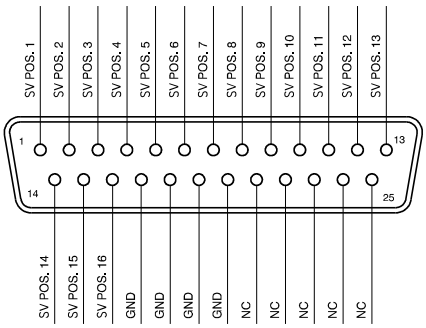

SUB-D 37 CONTACTS CONNECTOR