From the top

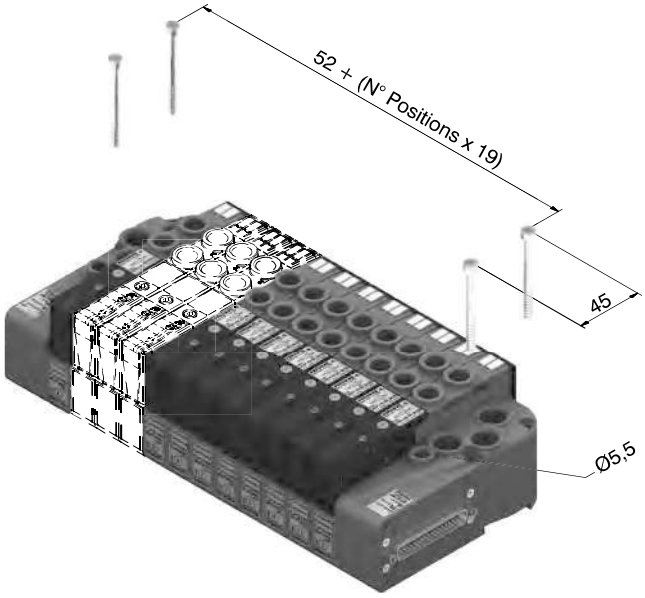

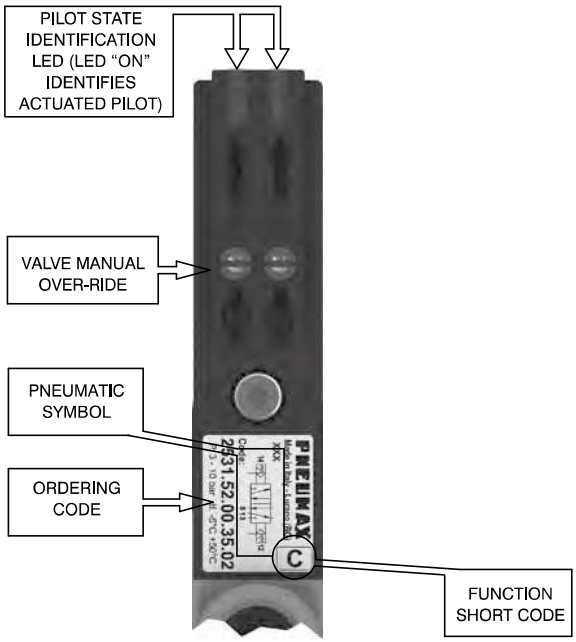

DIN rail fixing

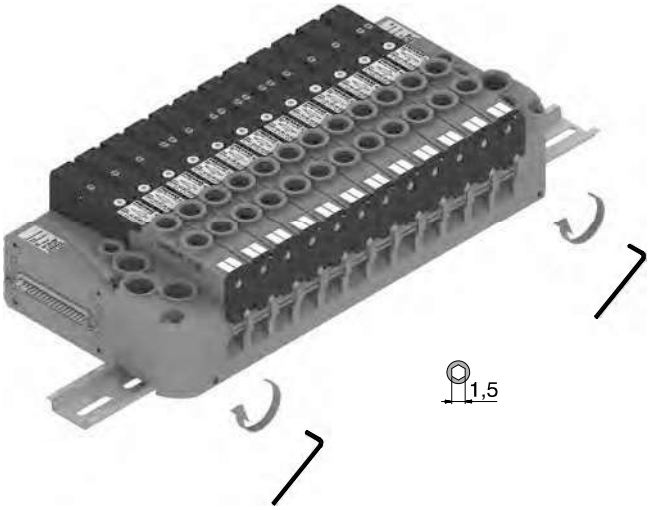

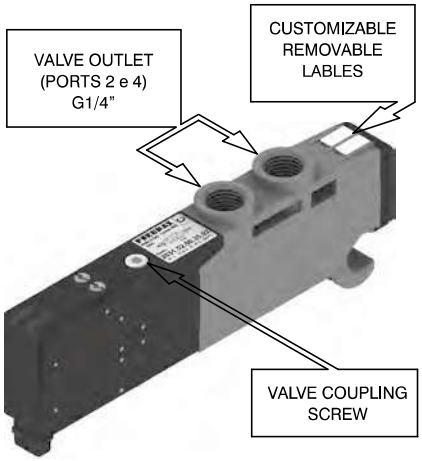

Maximum possible size according to valves seats

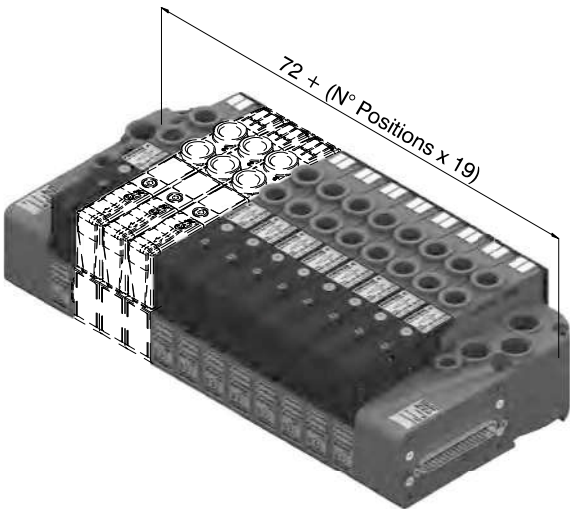

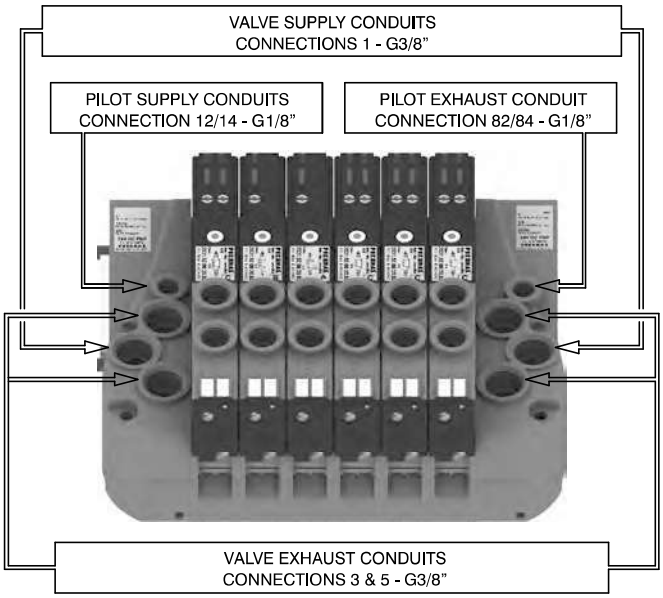

Manual override actuation

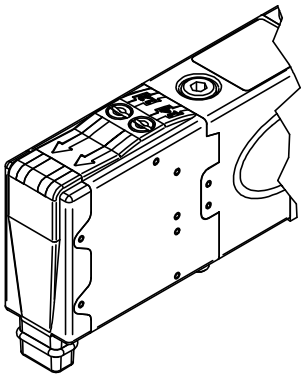

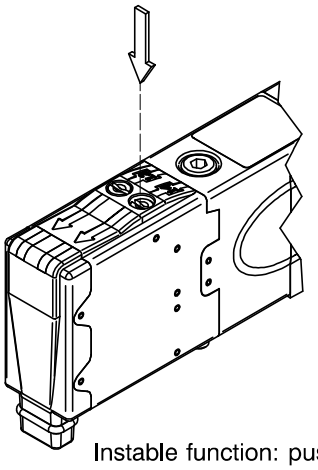

Instable function: push to actuate (when released it moves back to the original position).

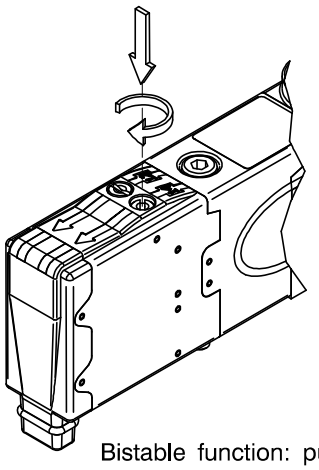

Bistable function: push and turn to get the bistable function

NOTE : It is strongly suggested to replace the original position after using

Valve Installation

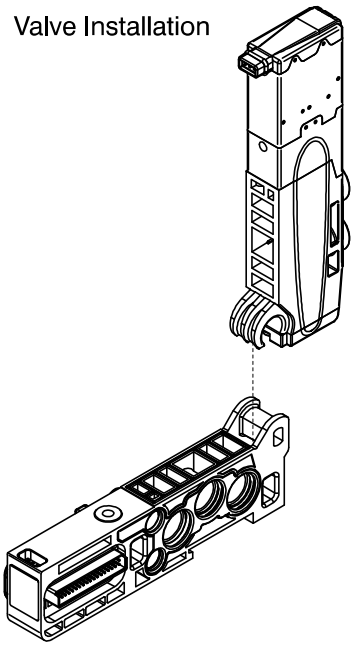

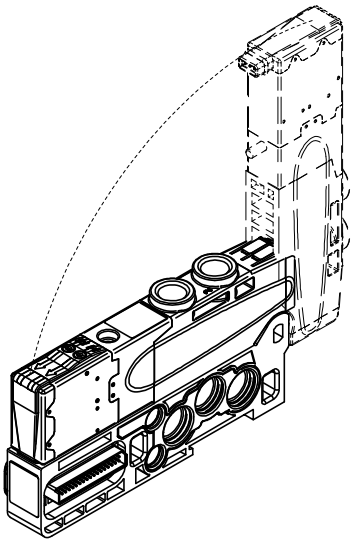

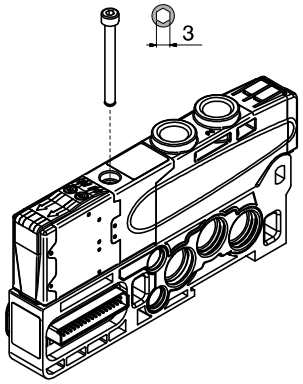

NOTE: Torque moment 1 Nm

Manifold assembly

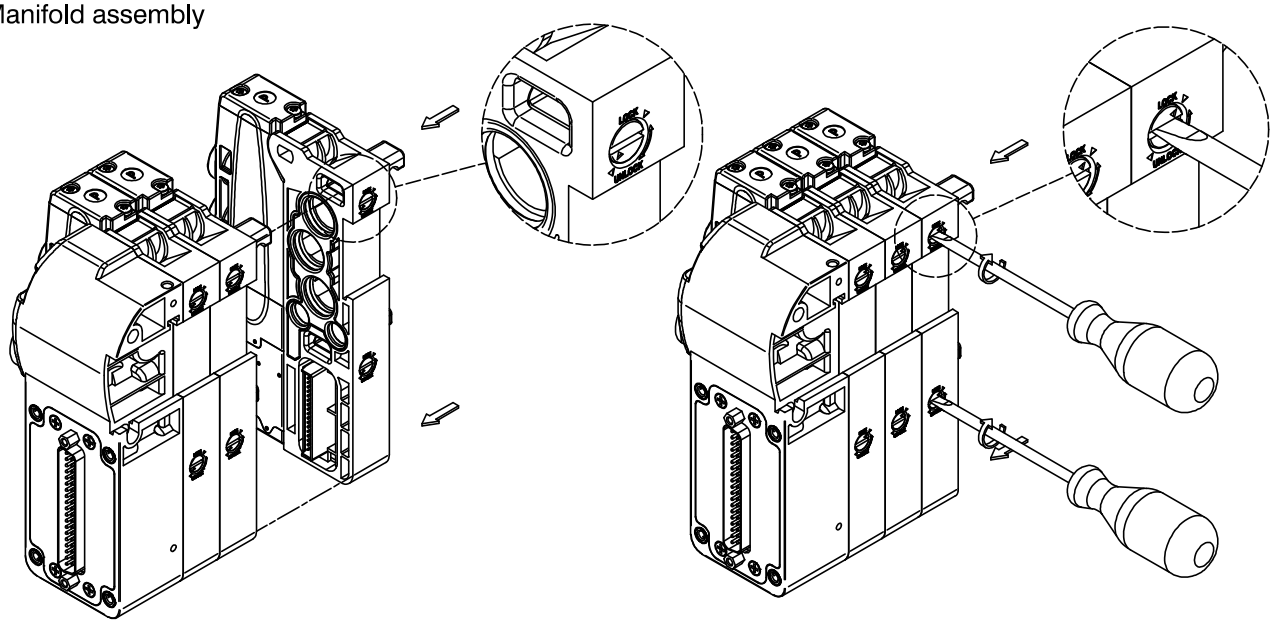

Manifold Layout configuration

MULTIPOINT CONNECTION

MP = PNP 24 V DC
MN = NPN 24 V DC
MA = 24 V AC

LEFT ENDPLATE

A2 = 25 poles - Self feeding
A3 = 37 poles - Self feeding
E2 = 25 poles - External feeding
E3 = 37 poles - External feeding
AM = 16 signals - Self feeding
EM = 16 signals - External feeding

RIGHT ENDPLATE

U0 = Closed
U2 = 25 Poles
U3 = 37 Poles

I/O MODULE

M8
(Requires 25 poles right endplate)

MODUL CONFIGURATION

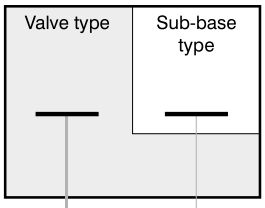

ACCESSORIES CONFIGURATION

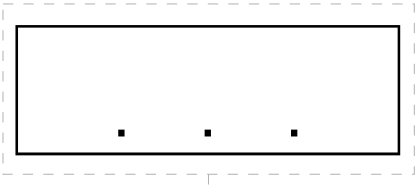

SHORT CODE FUNCTION / CONNECTION :

A1= 5/2 SOL.-SPRING + BASE TYPE 1 (1 electrical signal occupied)
A2= 5/2 SOL.-SPRING + BASE TYPE 2 (2 electrical signals occupied)
B1= 5/2 SOL.-DIFFERENTIAL + BASE TYPE 1 (1 electrical signal occupied)
B2= 5/2 SOL.-DIFFERENTIAL + BASE TYPE 2 (2 electrical signals occupied)
C2= 5/2 SOL.-SOL. + BASE TYPE 2 (2 electrical signals occupied)
E2= 5/3 CC SOL.-SOL. + BASE TYPE 2 (2 electrical signals occupied)
F2= 2x3/2 NC-NC (= 5/3 OC) SOL.-SOL.+BASE TYPE 2 (2 electrical signals occupied)
G2= 2x3/2 NO-NO (= 5/3 PC) SOL.-SOL.+BASE TYPE 2 (2 electrical signals occupied)
H2= 2x3/2 NC-NO SOL.-SOL. + BASE TYPE 2 (2 electrical signals occupied)
I2= 2x3/2 NO-NC SOL.-SOL. + BASE TYPE 2 (2 electrical signals occupied)
T1= FREE VALVE SPACE PLUG + BASE FOR MONOSTABLE VALVE
T2= FREE VALVE SPACE PLUG + BASE FOR BISTABLE VALVE

ACCESSORIES

U2 = Power supply 2 positions module
U4 = Power supply 4 positions module
W = Intermediate supply & exhaust module
X = Diaphragm plug on pipe 1
Y = Diaphragm plug on pipe 3
Z = Diaphragm plug on pipe 5
XY = Diaphragm plug on pipe 1 & 3
ZX = Diaphragm plug on pipe 5 & 1
ZY = Diaphragm plug on pipe 5 & 3
ZXY = Diaphragm plug on pipe 5, 1 & 3

NOTE:
While configuring the manifold always be careful that the maximum number of electrical signals available is:
32 when an input 37 poles endplate is used.
22 when an input 25 poles endplate is used.
The use of monostable valve mounted on a base type 2 (2 electrical signals occupied) causes the loss of one electric signal.
In this case the monostable valve can be replaced by a bistable valve. The diaphragms plugs are used to intercept the conduits 1,3 & 5 of the base. If it is necessary to interrupt more than one conduit in the same time then put in line the letters which identifies the position (for exemple : regarding the 3 & 5 conduits, put the Y & Z letters).
Should one or more conduits be cut more than one time it is necessary to add the relevant intermediate Supply/Exhaust module.

Series 2500 OPTYMA-F solenoid valve manifolds managed by multipoint connection are "well tried components"

	Well-tried component	- The product is a well-tried product for a safety-related application according to ISO 13849-1. - The relevant basic and well-tried safety principles according ISO 13849-2 for this product are fulfilled. - The suitability of the product for a precise application must be verified and confirmed by the user.
B_{10d}	50.000.000	

General:

CANopen® module is directly integrated on Optyma-F solenoid valves manifold via a 37 poles connector, normally used for multipolar cable connection.
Optyma-F solenoid valves connected to node must be PNP equivalent (final 02 in ordering code).
The node can be easily installed also on solenoid valves manifold already mounted on equipment.
Module can manage up to 32 solenoid valves, and, in the same time, a max number of 4 Input modules 5225.08F or a max number of 2 Input modules 5225.25F.
CANopen® module recognizes automatically the presence of the Input modules on power on.
Regardless of the number of Input modules connected, the managable solenoid valves are 32.
Node power supply is made by a M12 4P male circular connector.
The separation between node 24 VDC Power supply and outputs 24 VDC allows to switch off the outputs maintaning powered the node and inputs, if present.
Connection to Bus CANopen® is possible via 2 M12 5P male - female circular connectors; these two are connected in parallel and according to CiA Draft Recommendation 303-1 (V. 1.3 : 30 December 2004).
Transmission speed can be set by 3 dip-switches.
The node address can be set by 6 dip-switches using BCD numeration.
The module includes an internal terminating resistance that can be activated by a dip-switch.

Ordering code

5525.32F

Scheme / Overall dimensions and I/O layout :

POWER SUPPLY connector

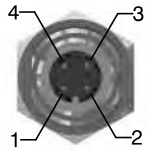

M12 4P MALE

PIN	DESCRIPTION
1	+24 VDC (NODE & INPUTS)
2	NC
3	GND
4	+24 VDC (OUTPUTS)

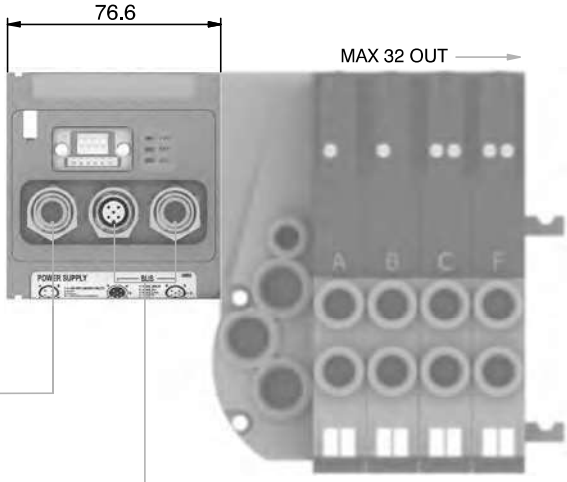

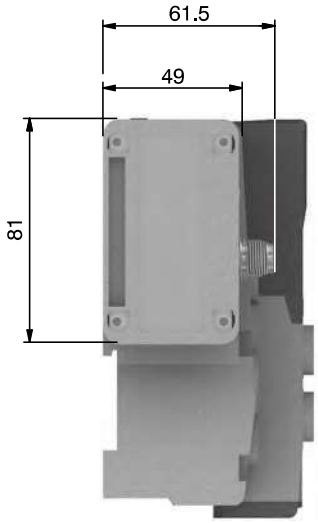

NETWORK connectors

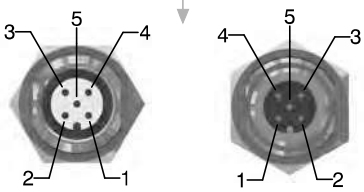

M12 5P FEMALE M12 5P MALE

PIN	SIGNAL	DESCRIPTION
1	CAN_SHLD	Optional CAN Shield
2	CAN_V+	Optional CAN external positive supply (Dedicated for supply of transceiver and Optocouplers, if galvanic isolation of the bus node applies)
3	CAN_GND	Ground / 0V / V-
4	CAN_H	CAN_H bus line (dominant high)
5	CAN_L	CAN_L bus line (dominant low)

Technical characteristics

	Model	5525.32F
	Specifications	CiA Draft Standard Proposal 301 V 4.10 (15 August 2006)
	Case	Reinforced technopolymer
Power supply	Power supply connection	M12 4P male connector (IEC 60947-5-2)
	Power supply voltage	+24 VDC +/- 10%
	Node consumption (without inputs)	30 mA
	Power supply diagnosis	Green LED PWR
Outputs	PNP equivalent outputs	+24 VDC +/- 10%
	Maximum current for output	100 mA
	Maximum output number	32
	Max output simultaneously actuated	32
Network	Network connectors	2 M12 5P connectors male-female type A (IEC 60947-5-2)
	Baud rate	10 - 20 - 50 - 125 - 250 - 500 - 800 - 1000 Kbit/s
	Addresses, possible numbers	From 1 to 63
	Max nodes in net	64 (slave + master)
	Bus maximum recommended length	100 m at 500 Kbit/s
	Bus diagnosis	Green LED + Red LED
	Configuration file	Available from our web site: http://www.pneumaxspa.com
	IP protection grade	IP65 when assembled
	Temperature range	From 0° to +50° C

General:

DeviceNet module is directly integrated on Optyma-F solenoid valves manifold via a 37 poles connector, normally used for multipolar cable connection.
Optyma-F solenoid valves connected to node must be PNP equivalent (final 02 in ordering code).
The node can be easily installed also on solenoid valves manifold already mounted on equipment.
Module can manage up to 32 solenoid valves, and, in the same time, a max number of 4 Input modules 5225.08F or a max number of 2 Input modules 5225.25F.
DeviceNet module recognizes automatically the presence of the Input modules on power on.
Regardless of the number of Input modules connected, the managable solenoid valves are 32.
Node power supply is made by a M12 4P male circular connector.
The separation between node 24 VDC Power supply and outputs 24 VDC allows to switch off the outputs maintaning powered the node and inputs, if present.
Connection to Bus DeviceNet is possible via 2 M12 5P male - female circular connectors; these two are connected in parallel and according to DeviceNet Specifications Volume I, release 2.0.
Transmission speed can be set by 3 dip-switches.
The node address can be set by 6 dip-switches using BCD numeration.
The module includes an internal terminating resistance that can be activated by a dip-switch.

Ordering code

5425.32F

Scheme / Overall dimensions and I/O layout :

POWER SUPPLY connector

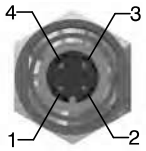

M12 4P MALE

PIN	DESCRIPTION
1	+24 VDC (NODE & INPUTS)
2	NC
3	GND
4	+24 VDC (OUTPUTS)

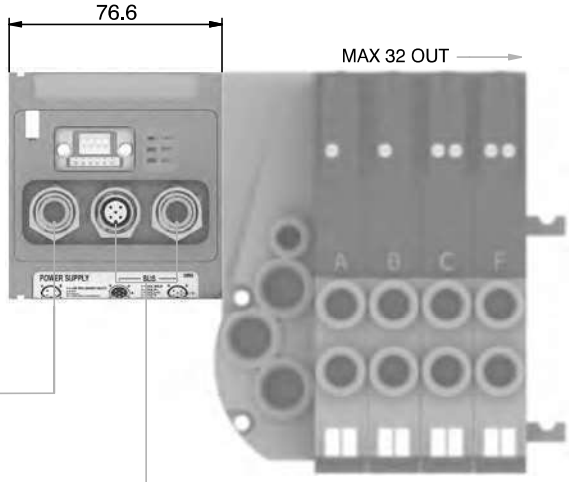

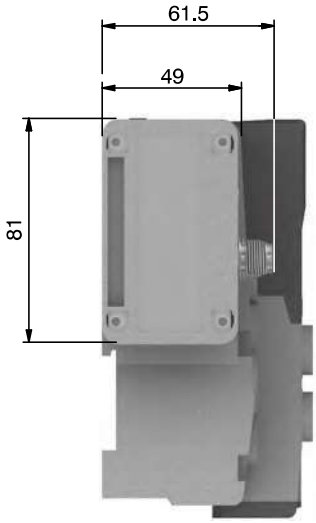

NETWORK connectors

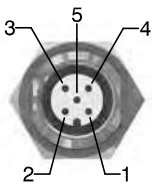

M12 5P FEMALE

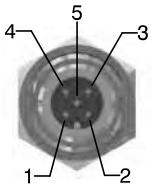

M12 5P MALE

PIN	SIGNAL	DESCRIPTION
1	CAN_SHLD	Optional CAN Shield
2	CAN_V+	Optional CAN external positive supply (Dedicated for supply of transceiver and Optocouplers, if galvanic isolation of the bus node applies)
3	CAN_GND	Ground / 0V / V-
4	CAN_H	CAN_H bus line (dominant high)
5	CAN_L	CAN_L bus line (dominant low)

Technical characteristics

	Model	5425.32F
	Specifications	DeviceNet Specifications Volume I, release 2.0.
	Case	Reinforced technopolymer
Power supply	Power supply connection	M12 4P male connector (IEC 60947-5-2)
	Power supply voltage	+24 VDC +/- 10%
	Node consumption (without inputs)	30 mA
	Power supply diagnosis	Green LED PWR
Outputs	PNP equivalent outputs	+24 VDC +/- 10%
	Maximum current for output	100 mA
	Maximum output number	32
	Max output simultaneously actuated	32
Network	Network connectors	2 M12 5P connectors male-female type A (IEC 60947-5-2)
	Baud rate	125 - 250 - 500 Kbit/s
	Addresses, possible numbers	From 1 to 63
	Max nodes in net	64 (slave + master)
	Bus maximum recommended length	100 m at 500 Kbit/s
	Bus diagnosis	Green LED + Red LED
	Configuration file	Available from our web site: http://www.pneumaxspa.com
	IP protection grade	IP65 when assembled
	Temperature range	From 0° to +50° C

General:

PROFIBUS DP module is directly integrated on Optyma-F solenoid valves manifold via a 37 poles connector, normally used for multipolar cable connection.
Optyma-F solenoid valves connected to node must be PNP equivalent (final 02 in ordering code).
The node can be easily installed also on solenoid valves manifold already mounted on equipment.
Module can manage up to 32 solenoid valves, and, in the same time, a max number of 4 Input modules 5225.08F or a max number of 4 Input modules 5225.25F.
PROFIBUS DP module recognizes automatically the presence of the Input modules on power on.
Regardless of the number of Input modules connected, the managable solenoid valves are 32.
Node power supply is made by a M12 4P male circular connector.
The separation between node 24 VDC Power supply and outputs 24 VDC allows to switch off the outputs maintaning powered the node and inputs, if present.
Connection to Bus PROFIBUS DP is possible via 2 M12 type B 5P male - female circular connectors; these two are connected in parallel and according to PROFIBUS Interconnection Technology (Version 1.1 : August 2001).
The node address can be set using BCD numeration: 4 dip-switches for the units and 4 dip-switches for the tens.
The module includes an internal terminating resistance that can be activated by 2 dip-switches.

Ordering code

5325.32F

Scheme / Overall dimensions and I/O layout :

POWER SUPPLY connector

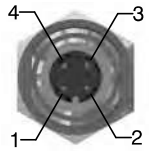

M12 4P MALE

PIN	DESCRIPTION
1	+24 VDC (NODE & INPUTS)
2	NC
3	GND
4	+24 VDC (OUTPUTS)

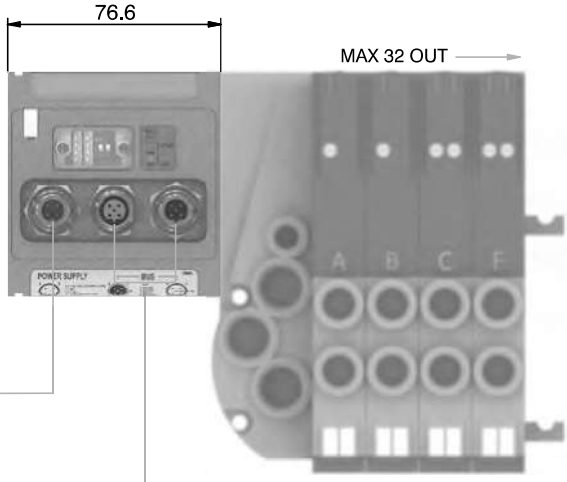

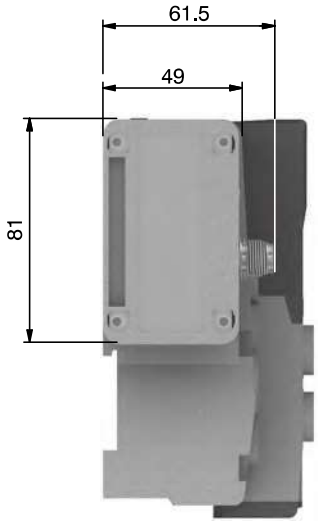

NETWORK connectors

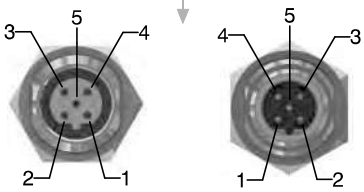

M12 5P FEMALE M12 5P MALE

PIN	SIGNAL	DESCRIPTION
1	VP	Power supply plus, (P5V)
2	A-line	Receive / Transmit data -N, A-line
3	DGND	Data Ground (reference potential to VP)
4	B-line	Receive / Transmit data -plus, B-line
5	SHIELD	Shield or PE

Technical characteristics

	Model	5325.32F
	Specifications	PROFIBUS DP
	Case	Reinforced technopolymer
Power supply	Power supply connection	M12 4P male connector (IEC 60947-5-2)
	Power supply voltage	+24 VDC +/- 10%
	Node consumption (without inputs)	50 mA
	Power supply diagnosis	Green LED PWR / Green LED OUT
Outputs	PNP equivalent outputs	+24 VDC +/- 10%
	Maximum current for output	100 mA
	Maximum output number	32
	Max output simultaneously actuated	32
Network	Network connectors	2 M12 5P male-female connectors type B
	Baud rate	9,6 - 19,2 - 93,75 - 187,5 - 500 - 1500 - 3000 - 6000 - 12000 Kbit/s
	Addresses, possible numbers	From 1 to 99
	Max nodes in net	100 (slave + master)
	Bus maximum recommended length	100 m at 12 Mbit/s - 1200 m at 9,6 Kbit/s
	Bus diagnosis	Green LED + Red LED
	Configuration file	Available from our web site: http://www.pneumaxspa.com
	IP protection grade	IP65 when assembled
	Temperature range	From 0° to +50° C

General:

EtherCAT® module is directly integrated on Optyma-F solenoid valves manifold via a 37 poles connector, normally used for multipolar cable connection.
Optyma-F solenoid valves connected to node must be PNP equivalent (final 02 in ordering code).
The node can be easily installed also on solenoid valves manifold already mounted on equipment.
Module can manage up to 32 solenoid valves, and, in the same time, a max number of 4 Input modules 5225.08F or a max number of 2 Input modules 5225.25F.
The EtherCAT® module, regardless the number of Input module connected, reports to have connected 4 Input modules.
Regardless of the number of Input modules connected, the managable solenoid valves are 32.
Node power supply is made by a M12 4P male circular connector.
The separation between node 24 VDC Power supply and outputs 24 VDC allows to switch off the outputs maintaning powered the node and inputs, if present.
Connection to Bus EtherCAT® is possible via 2 M12 4P type D female circular connectors. These two connectors lead the signal to two different communication ports, so they are not connected in parallel.
The node address is assigned during configuration.
Note: 5700 series has a different configuration file from series 5600.

Ordering code

5725.32F.EC

Scheme / Overall dimensions and I/O layout :

POWER SUPPLY connector

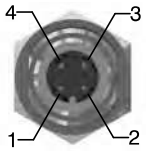

M12 4P MALE

PIN	DESCRIPTION
1	+24 VDC (NODE & INPUTS)
2	NC
3	GND
4	+24 VDC (OUTPUTS)

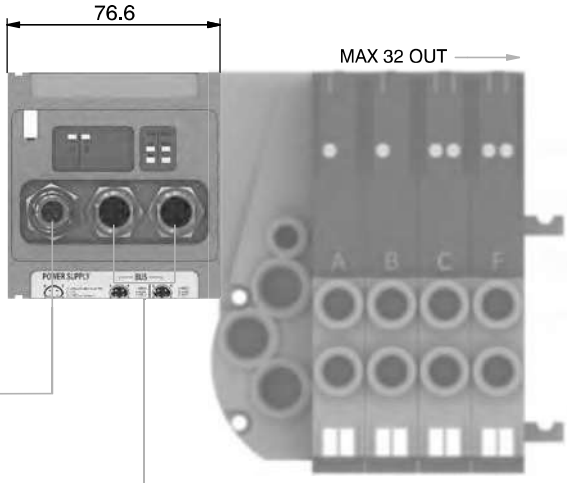

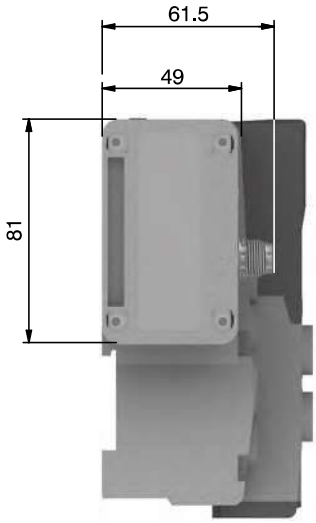

NETWORK connectors

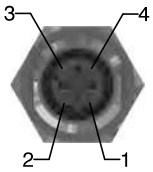

M12 4P FEMALE

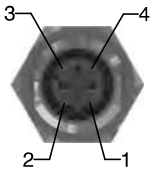

M12 4P FEMALE

PIN	SIGNAL	DESCRIPTION
1	TX+	Ethernet Transmit High
2	RX+	Ethernet Receive High
3	TX-	Ethernet Transmit Low
4	RX-	Ethernet Receive Low

Technical characteristics

	Model	5725.32F.EC
	Specifications	EtherCAT® Specifications ETG.1000 series
	Case	Reinforced technopolymer
Power supply	Power supply connection	M12 4P male connector (IEC 60947-5-2)
	Power supply voltage	+24 VDC +/- 10%
	Node consumption (without inputs)	400 mA
	Power supply diagnosis	Green LED PWR / Green LED OUT
Outputs	PNP equivalent outputs	+24 VDC +/- 10%
	Maximum current for output	100 mA
	Maximum output number	32
	Max output simultaneously actuated	32
Network	Network connectors	2 M12 4P female connectors type D (IEC 61076-2-101)
	Baud rate	100 Mbit/s
	Addresses, possible numbers	From 1 to 65535
	Max nodes in net	65536 (slave + master)
	Maximum distance between 2 nodes	100 m
	Bus diagnosis	1 green and 1 red LED for status + 2 LEDs for link & activity
	Configuration file	Available from our web site: http://www.pneumaxspa.com
	IP protection grade	IP65 when assembled
	Temperature range	From 0° to +50° C

General:

PROFINET IO RT module is directly integrated on Optyma-F solenoid valves manifold via a 37 poles connector, normally used for multipolar cable connection.
Optyma-F solenoid valves connected to node must be PNP equivalent (final 02 in ordering code).
The node can be easily installed also on solenoid valves manifold already mounted on equipment.
Module can manage up to 32 solenoid valves, and, in the same time, a max number of 4 Input modules 5225.08F or a max number of 4 Input modules 5225.25F.
The PROFINET IO RT module, regardless the number of Input module connected, reports to have connected 8 Input modules.
Regardless of the number of Input modules connected, the managable solenoid valves are 32.
Node power supply is made by a M12 4P male circular connector.
The separation between node 24 VDC Power supply and outputs 24 VDC allows to switch off the outputs maintaning powered the node and inputs, if present.
Connection to Bus PROFINET IO RT is possible via 2 M12 4P type D female circular connectors. These two connectors lead the signal to two different communication ports, so they are not connected in parallel.
The node address is assigned during configuration.

Ordering code

5725.32F.PN

Scheme / Overall dimensions and I/O layout :

POWER SUPPLY connector

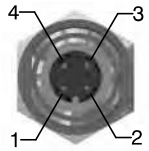

M12 4P MALE

PIN	DESCRIPTION
1	+24 VDC (NODE & INPUTS)
2	NC
3	GND
4	+24 VDC (OUTPUTS)

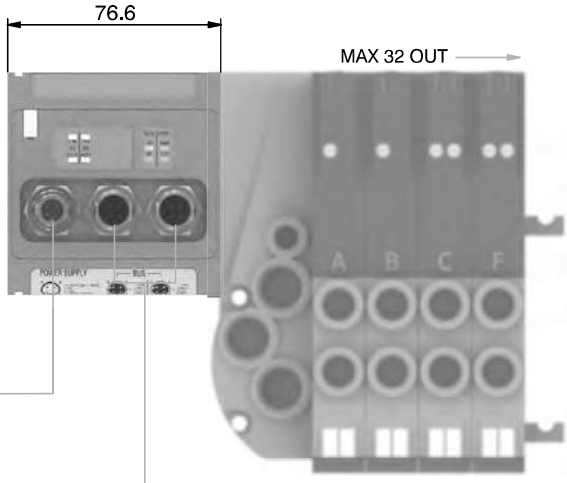

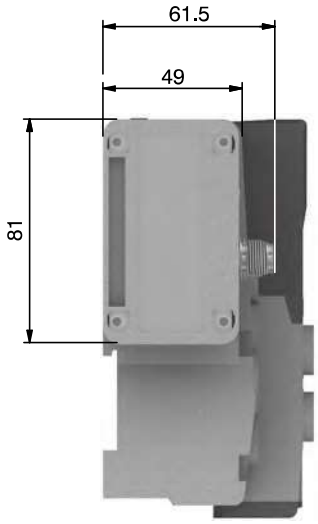

NETWORK connectors

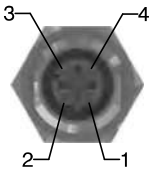

M12 4P FEMALE

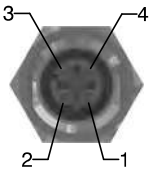

M12 4P FEMALE

PIN	SIGNAL	DESCRIPTION
1	TX+	Ethernet Transmit High
2	RX+	Ethernet Receive High
3	TX-	Ethernet Transmit Low
4	RX-	Ethernet Receive Low

Technical characteristics

	Model	5725.32F.PN
	Specifications	PROFINET IO RT
	Case	Reinforced technopolymer
Power supply	Power supply connection	M12 4P male connector (IEC 60947-5-2)
	Power supply voltage	+24 VDC +/- 10%
	Node consumption (without inputs)	400 mA
	Power supply diagnosis	Green LED PWR / Green LED OUT
Outputs	PNP equivalent outputs	+24 VDC +/- 10%
	Maximum current for output	100 mA
	Maximum output number	32
	Max output simultaneously actuated	32
Network	Network connectors	2 M12 4P female connectors type D (IEC 61076-2-101)
	Baud rate	100 Mbit/s
	Addresses, possible numbers	As an IP address
	Max nodes in net	As an Ethernet Network
	Maximum distance between 2 nodes	100 m
	Bus diagnosis	1 green and 1 red LED for status + 4 LEDs for link & activity
	Configuration file	Available from our web site: http://www.pneumaxspa.com
	IP protection grade	IP65 when assembled
	Temperature range	From 0° to +50° C