Series 2500 "OPTYMA-T"

General

With the introduction of the "T" configuration of solenoid valves with integrated pneumatic connections fitted directly on the sub base the 2500 series (called OPTYMA) is now richer than ever.
Many technical features make the new product interesting:

- Flow rate of 800 Nl/min
- Tie rod system to hold the sub bases together
- All pneumatic connections (push-in) on the same side of the manifold
- Quick mounting of the valve to the base using just one screw
- Possibility to replace the valve without the need to disconnect the connections
- Possibility to use different pressures along the manifold (including vacuum)
- IP65 environmental protection
- Electrical connection directly integrated into the base, 32 electrical signals available (can be used to build up a manifold of 32 monostable valves, 16 bistable valves or any combination within that limit).
- The electrical connection is made via 37 pin D-SUB connector.
- It is also available a 25-pole connector that is able to manage a maximum number of 22 electrical signals.

Possibility to integrate with Field Bus modules CANopen®, PROFIBUS DP, DeviceNet, EtherNet/IP, PROFINET IO RT/IRT, EtherCAT®, Powerlink and Modbus/TCP.
Possibility to connect input modules, even on the base that does not have the Field Bus module. Large use of technopolymer material reduces the overall weight of the manifold.

"Shifting time of pneumatic directional control valves or moving parts, logic devices were measured in accordance to ISO 12238:2001, Pneumatic fluid power-Directional control valves-Measurement of shifting time"

Main characteristics

Integrated and optimized electrical connection system.
IP65 protection degree.
Only one 19mm size
Electrical line connections on one side
Monostable and bistable solenoid valves with the same size dimensions.
Easy and fast manifold assembly - tie rod system to hold the sub bases together
Quick coupling connections directly integrated in sub base
Easy and fast manifold assembling.

Construction characteristics

Body	Technopolymer
Operators	Technopolymer
Spacers	NBR
Spacer	Technopolymer
Spools	Nickel - plated steel / Technopolymer
Springs	AISI 302 stainless steel
Pistons	Technopolymer
Piston seals	NBR

Functions

SV 5/2 MONOSTABLE SOLENOID-SPRING
SV 5/2 MONOSTABLE SOLENOID-DIFFERENTIAL
SV 5/2 BISTABLE SOLENOID-SOLENOID
SV 5/3 C.C. SOLENOID-SOLENOID
SV 2x3/2 N.C.-N.C. (=5/3 O.C.) SOLENOID-SOLENOID
SV 2x3/2 N.O.-N.O. (=5/3 P.C.) SOLENOID-SOLENOID
SV 2x3/2 N.C.-N.O. SOLENOID-SOLENOID

Technical characteristics

Voltage	24VDC ±10% PNP (NPN and AC on request)
Pilot consumption	1,3 Watt
Pilot working pressure (12-14)	From 3 to 7 bar max.
Valve working pressure [1]	from vacuum up to 10 bar
Operating temperature	-5°C +50°C
Protection degree	IP65
Life (standard operating conditions)	50000000
Fluid	Filtered air. No lubrication needed, if applied it shall be continuous

Solenoid - Spring

Coding: 2541.52.00.39.Ⓥ

Operational characteristics	
Fluid	Filtered air. No lubrication needed, if applied it shall be continuous
Working pressure (bar)	From vacuum to 10
Pressure range (bar)	3 ÷ 7
Temperature °C	-5 ÷ +50
Flow rate at 6 bar with Δp=1 (Nl/min)	750
Responce time according to ISO 12238, activation time (ms)	14
Responce time according to ISO 12238, deactivation time (ms)	40

Shifting time of pneumatic directional control valves or moving parts, logic devices were measured in accordance to ISO 12238:2001

Ⓥ	VOLTAGE
	02 = 24 VDC PNP
	12 = 24 VDC NPN
	05 = 24 VAC

Weight 129 g
SHORT FUNCTION CODE "A"

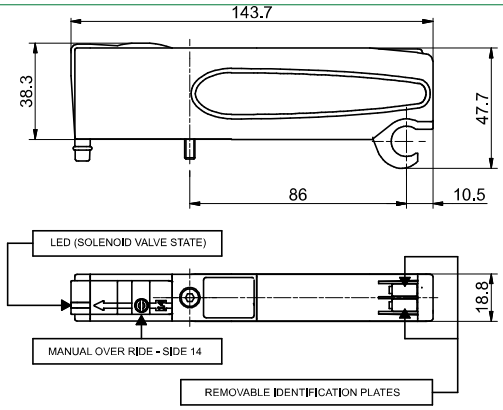

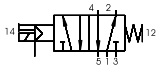

Solenoid-Differential

Coding: 2541.52.00.36.Ⓥ

Operational characteristics	
Fluid	Filtered air. No lubrication needed, if applied it shall be continuous
Working pressure (bar)	From vacuum to 10
Pressure range (bar)	3 ÷ 7
Temperature °C	-5 ÷ +50
Flow rate at 6 bar with Δp=1 (Nl/min)	750
Responce time according to ISO 12238, activation time (ms)	20
Responce time according to ISO 12238, deactivation time (ms)	29

Shifting time of pneumatic directional control valves or moving parts, logic devices were measured in accordance to ISO 12238:2001

Ⓥ	VOLTAGE
	02 = 24 VDC PNP
	12 = 24 VDC NPN
	05 = 24 VAC

Weight 126 g
SHORT FUNCTION CODE "B"

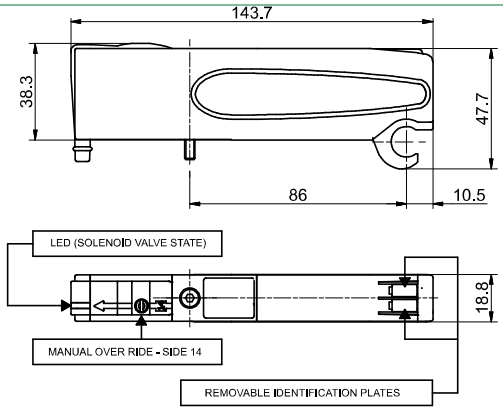

Solenoid-Solenoid

Coding: 2541.52.00.35.Ⓥ

Operational characteristics	
Fluid	Filtered air. No lubrication needed, if applied it shall be continuous
Working pressure (bar)	From vacuum to 10
Pressure range (bar)	3 ÷ 7
Temperature °C	-5 ÷ +50
Flow rate at 6 bar with Δp=1 (Nl/min)	750
Responce time according to ISO 12238, activation time (ms)	10
Responce time according to ISO 12238, deactivation time (ms)	14

Shifting time of pneumatic directional control valves or moving parts, logic devices were measured in accordance to ISO 12238:2001

Ⓥ	VOLTAGE
	02 = 24 VDC PNP
	12 = 24 VDC NPN
	05 = 24 VAC

Weight 134 g
SHORT FUNCTION CODE "C"

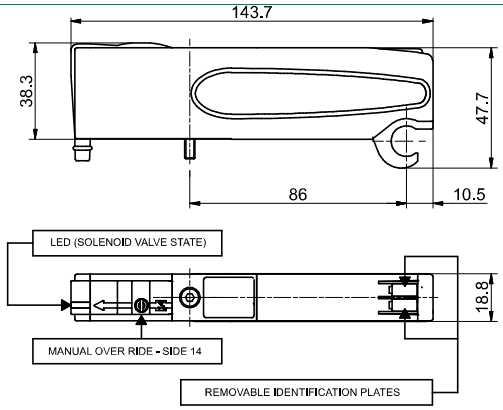

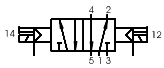

Solenoid-Solenoid 5/3

Coding: 2541.53.31.35.Ⓥ

Operational characteristics	
Fluid	Filtered air. No lubrication needed, if applied it shall be continuous
Working pressure (bar)	From vacuum to 10
Pressure range (bar)	3 ÷ 7
Temperature °C	-5 ÷ +50
Flow rate at 6 bar with Δp=1 (Nl/min)	600
Responce time according to ISO 12238, activation time (ms)	15
Responce time according to ISO 12238, deactivation time (ms)	20

Shifting time of pneumatic directional control valves or moving parts, logic devices were measured in accordance to ISO 12238:2001

	VOLTAGE
Ⓥ	**02** = 24 VDC PNP
	12 = 24 VDC NPN
	05 = 24 VAC

Weight 132 g
SHORT FUNCTION CODE "E"

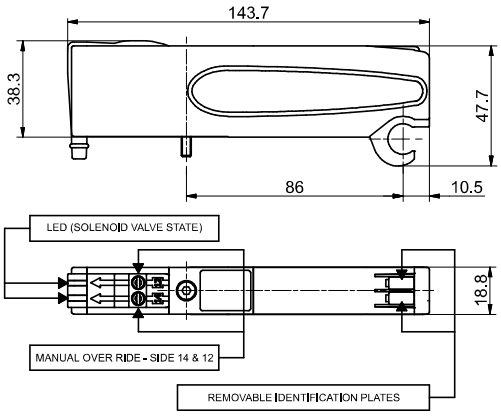

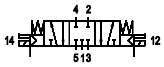

Solenoid-Solenoid 2x3/2

Coding: 2541.62.Ⓕ.35.Ⓥ

Operational characteristics	
Fluid	Filtered air. No lubrication needed, if applied it shall be continuous
Working pressure (bar)	From vacuum to 10
Pressure range (bar)	3 ÷ 7
Temperature °C	-5 ÷ +50
Flow rate at 6 bar with Δp=1 (Nl/min)	700
Responce time according to ISO 12238, activation time (ms)	15
Responce time according to ISO 12238, deactivation time (ms)	25

Shifting time of pneumatic directional control valves or moving parts, logic devices were measured in accordance to ISO 12238:2001

	FUNCTION
Ⓕ	**44** = NC-NC (5/3 Open centres)
	55 = NO-NO (5/3 Pressured centres)
	45 = NC-NO (normally closed-normally open)
	54 = NO-NC (normally open-normally closed)
	VOLTAGE
Ⓥ	**02** = 24 VDC PNP
	12 = 24 VDC NPN
	05 = 24 VAC

Weight 122 g
"Example: If inlet pressure is set at 5bar then pilot pressure must be at least Pp=2,5+(0.2*5)=3,5bar"

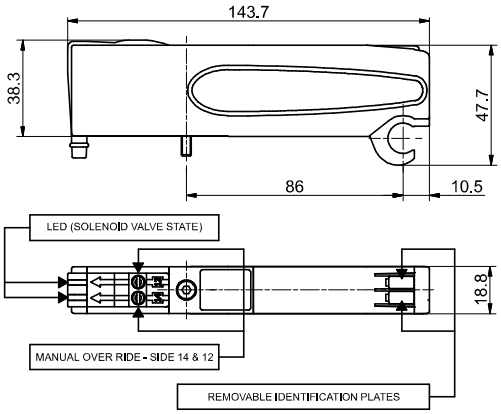

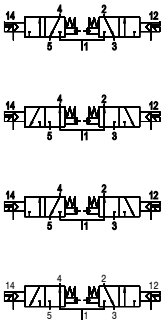

"Example: If inlet pressure is set at 5bar then pilot pressure must be at least Pp=2,5+(0.2*5)=3,5bar"

Right Endplates

Coding: 2540.03.Ⓒ

Operational characteristics	
Fluid	Filtered air. No lubrication needed, if applied it shall be continuous
Working pressure (bar)	From vacuum to 10
Temperature °C	-5 ÷ +50

Ⓒ	ELECTRICAL CONNECTION
	00 = Electrical connection
	25P = Connectors 25 poles

Conduit 82/84=DO NOT PRESSURIZE, SOLENOID PILOTS EXHAUST

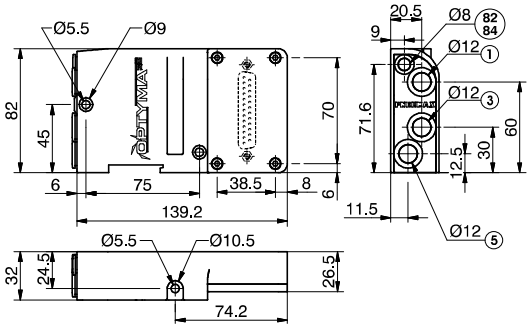

Weight 274 g

Left Endplates

Coding: 2540.Ⓥ.Ⓒ

Operational characteristics	
Fluid	Filtered air. No lubrication needed, if applied it shall be continuous
Working pressure (bar)	From vacuum to 10
Pressure range (bar)	3 ÷ 7
Temperature °C	-5 ÷ +50

Ⓥ	VERSION
	02 = External feeding
	12 = Self-feeding
Ⓒ	ELECTRICAL CONNECTION
	37P = Connectors 37 poles PNP
	25P = Connectors 25 poles PNP
	37N = Connectors 37 poles NPN
	25N = Connectors 25 poles NPN
	37A = Connectors 37 poles AC
	25A = Connectors 25 poles AC

Weight 300 g

2540.02.Ⓒ
Left Endplates-External feeding base: 12/14 divided from conduct 1

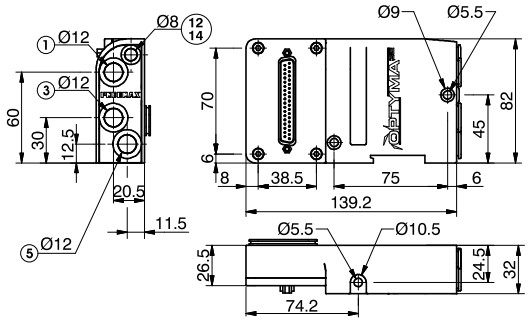

Weight 300 g

2540.12.Ⓒ
Left Endplates - Self-feeding Base: 12/14 connected with conduct 1

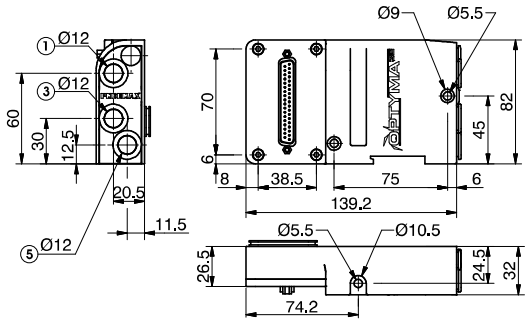

Closing plate

Coding: 2530.00

SHORT FUNCTION CODE "T"

Operational characteristics	
Fluid	Filtered air. No lubrication needed, if applied it shall be continuous
Working pressure (bar)	From vacuum to 10
Temperature °C	-5 ÷ +50

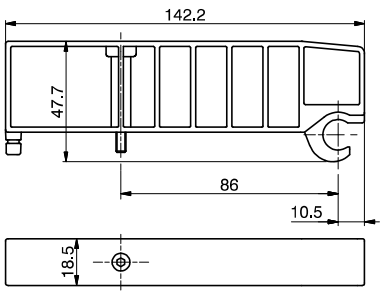

Weight 53,5 g

Modular base

Coding: 254Ⓒ.01Ⓥ

Operational characteristics	
Fluid	Filtered air. No lubrication needed, if applied it shall be continuous
Working pressure (bar)	From vacuum to 10
Temperature °C	-5 ÷ +50

Ⓒ		WORKING PORTS SIZE
	1	= G1/8" female straight cartridge
	4	= Cartridge Ø4
	6	= Quick fitting tube Ø6
	8	= Quick fitting tube Ø8
Ⓥ		VERSION
	M	= for Monostable SV
	B	= for Bistable SV

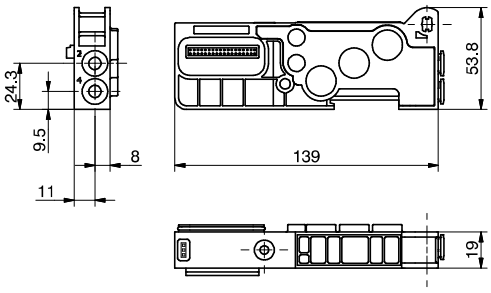

Weight 96,5 g

Intermediate Inlet/Exhaust module

Coding: 2540.10

Operational characteristics	
Fluid	Filtered air. No lubrication needed, if applied it shall be continuous
Working pressure (bar)	From vacuum to 10
Temperature °C	-5 ÷ +50

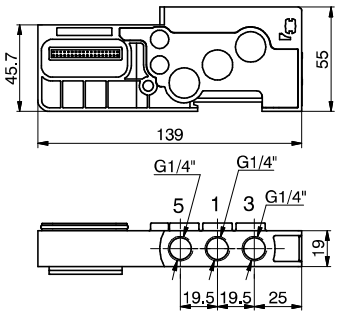

Weight 115 g
SHORT FUNCTION CODE "W"

Nut

Coding: 2540.KD.00

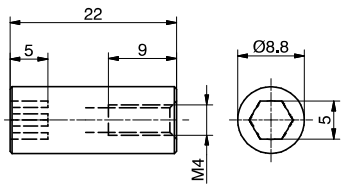

Weight 10 g
The Kit includes 4 pieces

Extension (1 Position)

Coding: 2540.KP.01

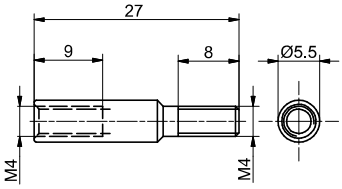

Weight 3,5 g
The Kit includes 2 pieces

Set with single tie-rod (max. 32 Solenoid valves)

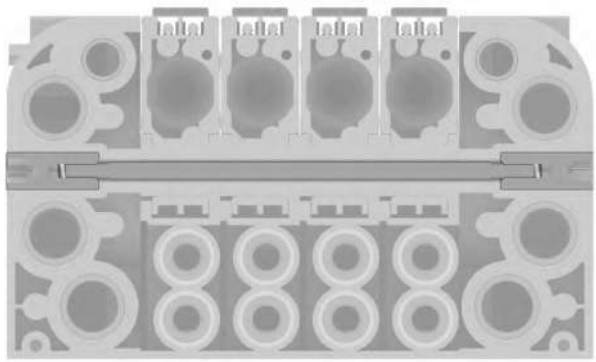

Set with tie-rod, more extension adding a valve

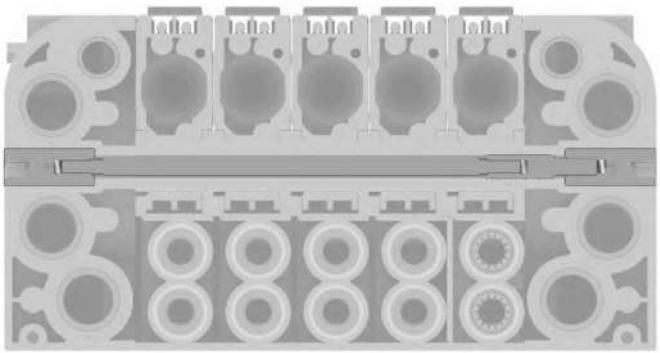

General :

Each Optyma-T manifold lets to manage 32 command signals for the valves.
Optyma-T serial nodes (CANopen®, DeviceNet, PROFIBUS DP, EtherCAT®, PROFINET IO RT, EtherNet/IP and Powerlink) have a single pin for the power supply of the solenoid valves. So if you want to interrupt the power supply of one valve it is necessary to interrupt all the valves. The additional power supply module lets to interrupt at the same time the first 2 available command signals for the valves after the module itself. The additional power supply module is particularly useful also when you use control signals that block the valves. This application is effective both with serial management and multi-pole connection of the manifolds.
This module is inserted directly into the Optyma-T solenoid valves manifold.

Ordering code

2540.10.2A

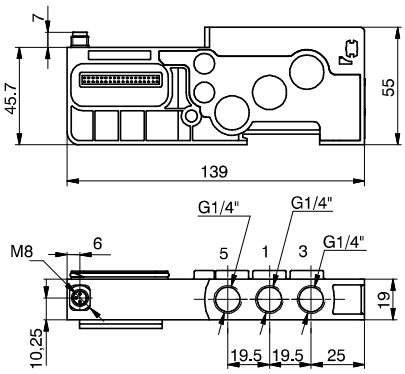

In particular this module is fitted with a M8 3 pins connector:
+24V, not connected, GND.

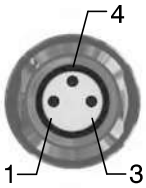

PIN	DESCRIPTION
1	+24 VDC
4	NOT CONNECTED
3	GND

WORKING PRINCIPLE / SIMPLIFIED FUNCTIONAL DIAGRAM

This module uses an external power supply (+24VDC) to manage the solenoid valves.

The output signal from serial node / multi-pole connection is used as command signal: when it is high the +24VDC will be present at the module output.

If you want to cut off the power supply to a group of 2 valves it is sufficient to take away the +24VDC provided to the module by the M8 connector.

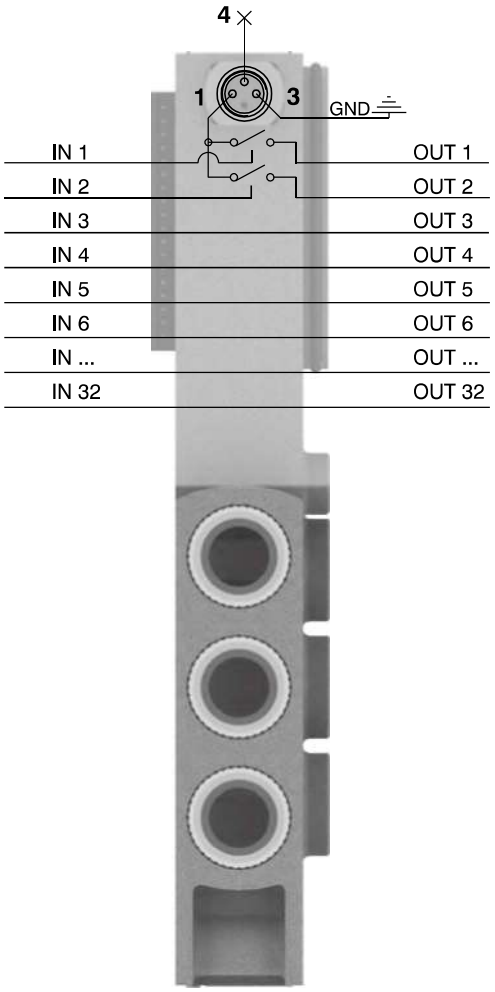

Please note: It is possible to use more modules to interrupt all the command signals, simply by inserting them before the signals to interrupt and after the signals already interrupted.

Usage examples:

EXAMPLE 1:
Manifold of 12 monostable valves on which you want to interrupt signals 7-8

Assembly:
- 6 monostable valves (not interruptible because before the module),
- 1 additional power supply module,
- 6 monostable valves. Please note: the first 2 monostable of these are interruptible by the module, while the following 4 will work correctly managed directly by the corresponding command signals.

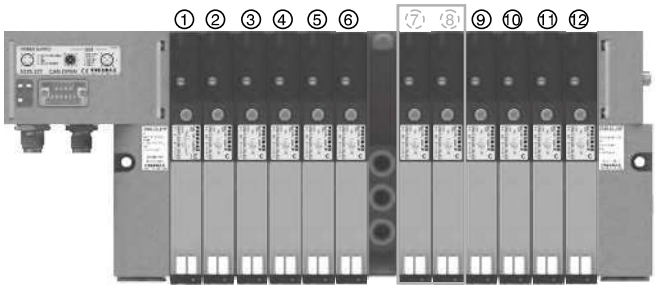

EXAMPLE 2:
Manifold of 12 monostable valves on which you want to interrupt signal 9

Assembly:
- 8 monostable valves (not interruptible because before the module),
- 1 additional power supply module,
- 1 monostable valve (interruptible),
- 1 closing plate mounted on a monostable base,
- 3 monostable valves (work correctly managed directly by the corresponding command signals).

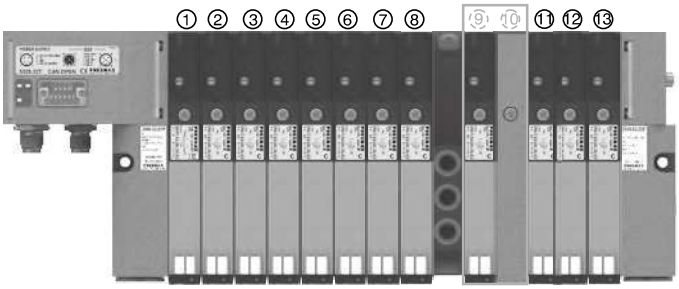

Please note: Each additional power supply module interrupts always 2 electrical signals.
If you need to interrupt less than 2 signals you can:
- assemble the valves to interrupt in the last positions of the manifold, so you don't need to worry about the interrupted exceeding signals;
- use a bistable base and mount a monostable valve (for each signal less than the 2 standard);
- use a monostable base and mount a closing plate (for each signal less than the 2 standard).

EXAMPLE 3:
Manifold of 7 monostable e 3 bistable valves on which you want to interrupt signals 2-3 and 8-9.

Assembly:
- 1 monostable valve (not interruptible because before the module),
- 1 additional power supply module,
- 6 monostable valves.
Please note: the first 2 monostable of these are interruptible by the module, while the following 4 will work correctly managed directly by the corresponding command signals.
- 1 additional power supply module,
- 3 bistable valves.
Please note: the first bistable of these valves is interruptible by the module, while the following 2 will work correctly managed directly by the corresponding command signals.

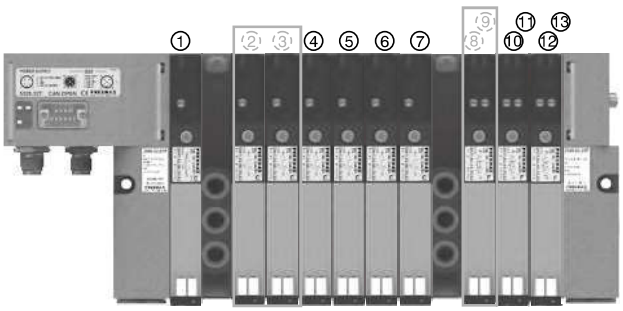

General :

Each Optyma-T manifold lets to manage 32 command signals for the valves.
Optyma-T serial nodes (CANopen®, DeviceNet, PROFIBUS DP, EtherCAT®, PROFINET IO RT, EtherNet/IP and Powerlink) have a single pin for the power supply of the solenoid valves. So if you want to interrupt the power supply of one valve it is necessary to interrupt all the valves.
The additional power supply module lets to interrupt at the same time the first 4 available command signals for the valves after the module itself. The additional power supply module is particularly useful also when you use control signals that block the valves. This application is effective both with serial management and multi-pole connection of the manifolds.
This module is inserted directly into the Optyma-T solenoid valves manifold.

Ordering code

2540.10.4A

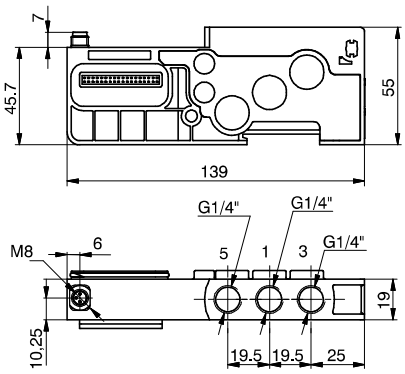

In particular this module is fitted with a M8 3 pins connector:
+24V, not connected, GND.

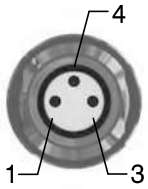

PIN	DESCRIPTION
1	+24 VDC
4	NOT CONNECTED
3	GND

WORKING PRINCIPLE / SIMPLIFIED FUNCTIONAL DIAGRAM

This module uses an external power supply (+24VDC) to manage the solenoid valves.

The output signal from serial node / multi-pole connection is used as command signal: when it is high the +24VDC will be present at the module output.

If you want to cut off the power supply to a group of 4 valves it is sufficient to take away the +24VDC provided to the module by the M8 connector.

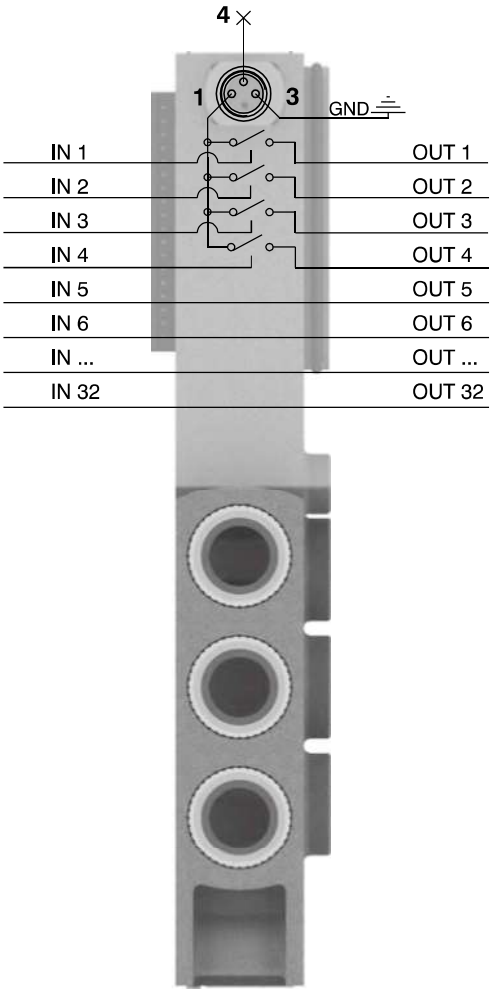

Please note: It is possible to use more modules to interrupt all the command signals, simply by inserting them before the signals to interrupt and after the signals already interrupted.

Usage examples:

EXAMPLE 1:
Manifold of 12 monostable valves on which you want to interrupt signals 7-8-9-10

Assembly:
- 6 monostable valves (not interruptible because before the module),
- 1 additional power supply module,
- 6 monostable valves. Please note: the first 4 monostable of these are interruptible by the module, while the following 2 will work correctly managed directly by the corresponding command signals.

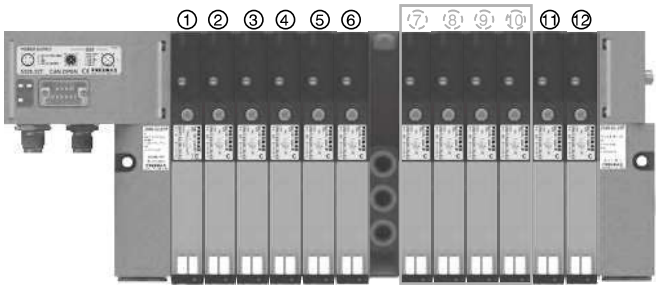

EXAMPLE 2:
Manifold of 12 monostable valves on which you want to interrupt signals 7-8-9

Assembly:
- 6 monostable valves (not interruptible because before the module),
- 1 additional power supply module,
- 3 monostable valves (interruptible),
- 1 closing plate mounted on a monostable base,
- 3 monostable valves (work correctly managed directly by the corresponding command signals).

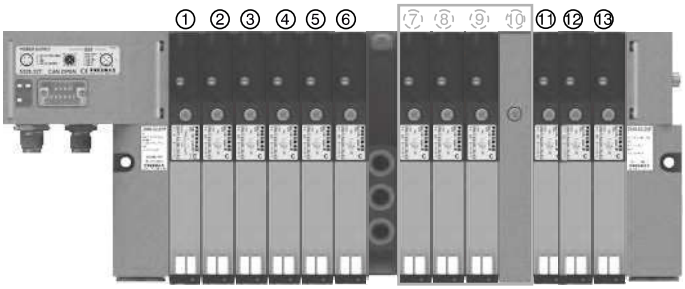

Please note: Each additional power supply module interrupts always 4 electrical signals.
If you need to interrupt less than 4 signals you can:
- assemble the valves to interrupt in the last positions of the manifold, so you don't need to worry about the interrupted exceeding signals;
- use a bistable base and mount a monostable valve (for each signal less than the 4 standard);
- use a monostable base and mount a closing plate (for each signal less than the 4 standard).

EXAMPLE 3:
Manifold of 7 monostable e 3 bistable valves on which you want to interrupt signals 2-3-4-5 and 8-9-10-11.

Assembly:
- 1 monostable valve (not interruptible because before the module),
- 1 additional power supply module,
- 6 monostable valves.
Please note: the first 4 monostable of these are interruptible by the module, while the following 2 will work correctly managed directly by the corresponding command signals.
- 1 additional power supply module,
- 3 bistable valves.
Please note: the first 2 bistable of these valves are interruptible by the module, while the following will work correctly managed directly by the corresponding command signals.

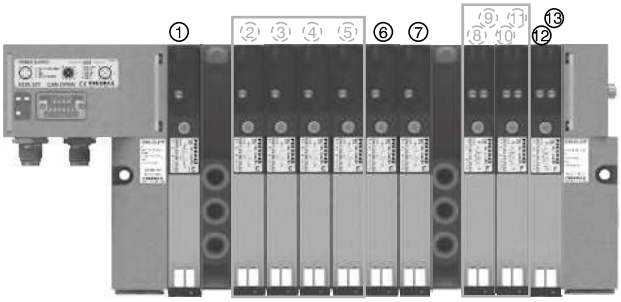

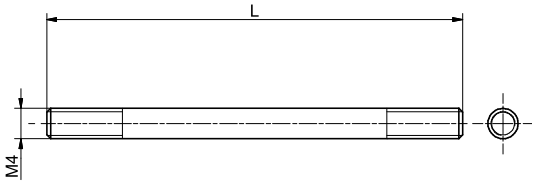

Coding: 2540.KT.Ⓟ

	N. POSITIONS
Ⓟ	**01** = Nr. 1 Position
	02 = Nr. 2 Positions
	03 = Nr. 3 positions
	04 = Nr. 4 Positions
	05 = Nr. 5 positions
	06 = Nr. 6 Positions
	07 = Nr. 7 positions
	08 = Nr. 8 Positions
	09 = Nr. 9 positions
	10 = Nr. 10 Positions
	11 = Nr. 11 positions
	12 = Nr. 12 Positions
	13 = Nr. 13 positions
	14 = Nr. 14 Positions
	...
	32 = Nr. 32 Positions

Polyethylene Silencer Series SPL-R

Coding: SPLR.Ⓓ

	TUBE DIAMETER
Ⓓ	**8** = 8 mm
	12 = 12 mm

Diaphragm plug

Coding: 2530.17

Cable complete with connector, 25 Poles IP65

Coding: 2300.25.Ⓛ.Ⓒ

	CABLE LENGTH
Ⓛ	**03** = 3 meters
	05 = 5 meters
	10 = 10 meters
	FUNCTION
Ⓕ	**31** = Closed centres
	32 = Open centres
	33 = Pressured centres

Cable complete with connector, 37 Poles IP65

Coding: 2400.37.Ⓛ.Ⓒ

	CABLE LENGTH
Ⓛ	**03** = 3 meters
	05 = 5 meters
	10 = 10 meters
	FUNCTION
Ⓕ	**31** = Closed centres
	32 = Open centres
	33 = Pressured centres

Cable complete with connector, 25 Poles IP65

Coding: 2400.25.Ⓛ.25

	CABLE LENGTH
Ⓛ	**03** = 3 meters
	05 = 5 meters
	10 = 10 meters

The electrical connection is achieved by a 37 pin connector and can manage up to 32 solenoid pilots.
It is also possible use a 25 sub-D pin connector and, in this case, it is possible to manage a maximum of 22 outputs.
The management and distribution of the electrical signals between each valve is obtained thanks to an electrical connector which receives the signals from the previous module, uses one, two or none depending on the type, and carries forward to the next module the remaining.
Bistable valves, 5/3 and 2x3/2 valves which have two solenoid pilots built in, use two signals; the first is directed to the pilot side 14 the second to the pilot side 12. Modular bases can be fitted with two type of electrical connector: the monostable version uses only one signal (connected to the pilot side 14) and carries forward the remaining, the bistable version which always uses two signals.
This solution allows the modification of the manifold (replacement of monostable valves without bistable for example) without having to reset the PLC output layout.
On other hand this solution limits the maximum number of valves to 16 when it is used a 37 pin connector or 11 when it is used a 25 pin connector.
Intermediate supply/exhaust module uses an electrical connector directly forwarding signals to the next one without any kind of modification.
This allows the use of intermediate modules in any position of the manifold.
All the electrical signals that have not been used on the manifold can be used placing at the end of the manifold the end plate complete with the 25 sub-D female connector.
The number of available signals depends of the connector used to the type of the left end plate and by the total signals used along the manifold:

37 pin connector nr of output = 32 – (total of used signals)
25 pin connector nr of output = 22 – (total of used signals)

Following we show some examples of possible combination and the relative pin assignment.

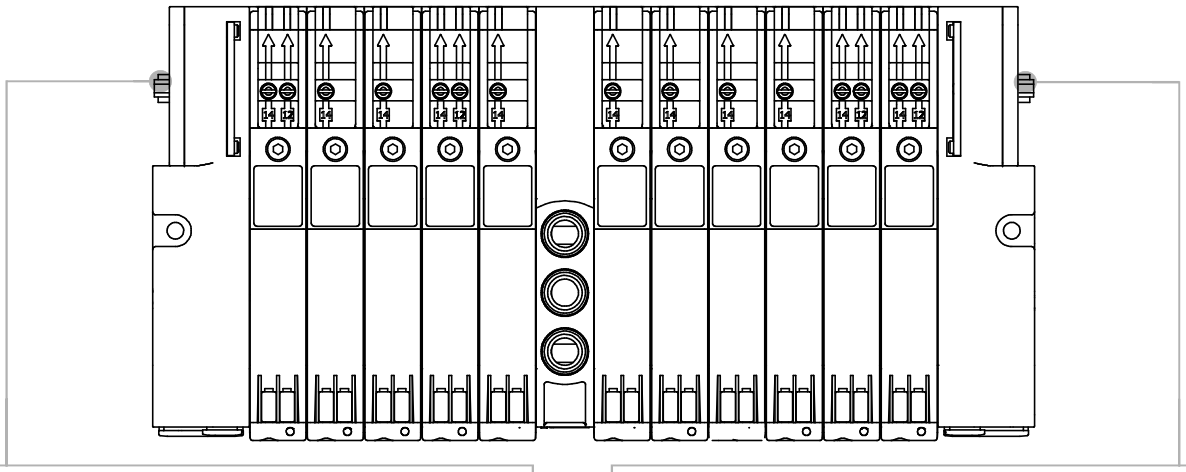

IN-LET ELECTRIC CONNECTIONS

SUB-D 37 POLE
MALE CONNECTOR

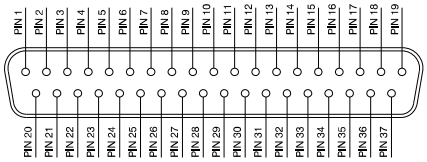

1 - 32 = SOLENOID VALVES SIGNAL
33 - 35 = GND
36 - 37 = THROUGH LINE

SUB-D 25 POLE
MALE CONNECTOR

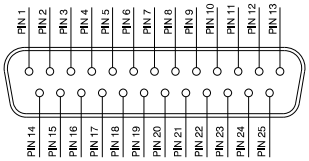

1 - 22 = SOLENOID VALVES SIGNAL
23 - 24 = GND
25 = THROUGH LINE

OUTLET ELECTRIC CONNECTIONS
(IF PRESENT)

SUB-D 25 POLE
FEMALE CONNECTOR

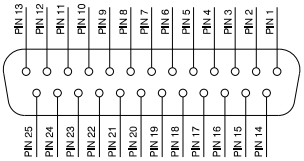

1 - 22 = SOLENOID VALVES SIGNAL
23 - 24 = GND
25 = THROUGH