Series 2600

General

They have been designed to be easily assembled into groups or manifolds.
The 2600 series comprises a range of products classified according to the body size of 26mm divided into 3 types "LINE", "FLAT" and "VDMA".
Is not included the integral electrical connection

Construction characteristics

Central body	Extruded aluminium bar with chemical nickel treatment and PTFE (polytetrafleurethylene)
Connection plates	Die-cast aluminium
Operators	Technopolymer
Spool seals	Oil resistant nitrile rubber - HNBR
Spools	Aluminium 2011
Springs	AISI 302 stainless steel
Pistons	Technopolymer
Piston seals	Oil resistant nitrile rubber - NBR

Ordering codes for minature solenoid valves

The 15 mm. miniature solenoid valve with 1,1 mm. orifice has been selected for piloting this series of valves (see Series 300).
This results in low response times and reduced power consumption.
The valve can be supplied with the coil upward or downward (multipolar connections) depending on the application.
Codes are as follows:

Coil upward code

01 = miniature solenoid 12 VDC
02 = miniature solenoid 24 VDC
05 = miniature solenoid 24 VAC
06 = miniature solenoid 110 VAC
07 = miniature sol. 230 VAC
08 = miniature sol. 24 VDC 1W
09 = miniature sol. 24 VDC Earth faston

Coil downward code

11 = miniature solenoid 12 VDC
12 = miniature solenoid 24 VDC
15 = miniature solenoid 24 VAC
16 = miniature solenoid 110 VAC
17 = miniature sol. 230 VAC
18 = miniature sol. 24 VDC 1W Downward
19 = miniature sol. 24 VDC Earth faston Downward

Miniature solenoid c UL us homologated are available (see Series 300).

Use and maintenance

The average life of the solenoid valve exceeds 50.000.000 cycles when used under optimum conditions.
Adequate lubrication reduces seals wear, just as proper filtering of supply air prevents the build-up of dirt that can cause malfunction.
Ensure the valve is used within our recommended criteria for pressure and temperature.
In dirty or dusty environments, the exhaust ports should be protected.
A seal kit including the spool is available for overhauling the valve. This operation does not require a skilled worker, although a particular care should be taken when reassembling the valve.

Pneumatic - Spring

Coding: 261Ⓐ.52.00.19

Operational characteristics	
Fluid	Filtered air. No lubrication needed, if applied it shall be continuous
Max working pressure (bar)	10
Temperature °C	-5 ÷ +50
Flow rate at 6 bar with Δp=1 (Nl/min)	1500
Orifice size (mm)	9
Pilot ports size	G1/8"

	WORKING PORTS SIZE
Ⓐ	**1** = G3/8"
	5 = G1/4"
	8 = Quick fitting tube Ø10

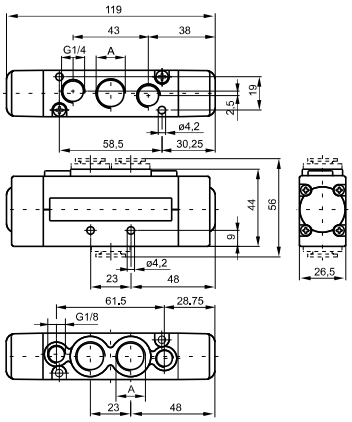

Weight 235 g
Minimum piloting pressure 2 bar

For dimension "A" see ordering code

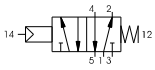

Pneumatic - Differential

Coding: 261Ⓐ.52.00.16

Operational characteristics	
Fluid	Filtered air. No lubrication needed, if applied it shall be continuous
Max working pressure (bar)	10
Temperature °C	-5 ÷ +50
Flow rate at 6 bar with Δp=1 (Nl/min)	1500
Orifice size (mm)	9
Pilot ports size	G1/8"

	WORKING PORTS SIZE
Ⓐ	**1** = G3/8"
	5 = G1/4"
	8 = Quick fitting tube Ø10

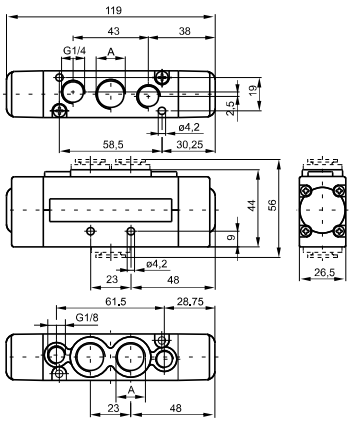

Weight 235 g
Minimum piloting pressure 2 bar

For dimension "A" see ordering code

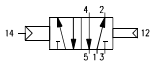

Pneumatic - Differential (External)

Coding: 261Ⓐ.52.00.17

Operational characteristics	
Fluid	Filtered air. No lubrication needed, if applied it shall be continuous
Max working pressure (bar)	10
Temperature °C	-5 ÷ +50
Flow rate at 6 bar with Δp=1 (Nl/min)	1500
Orifice size (mm)	9
Pilot ports size	G1/8"

	WORKING PORTS SIZE
Ⓐ	**1** = G3/8"
	5 = G1/4"
	8 = Quick fitting tube Ø10

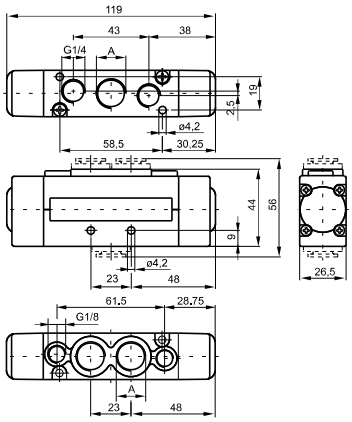

Weight 235 g
Minimum piloting pressure 2 bar

For dimension "A" see ordering code

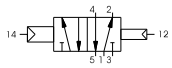

Pneumatic - Pneumatic

Coding: 261Ⓐ.52.00.18

Operational characteristics	
Fluid	Filtered air. No lubrication needed, if applied it shall be continuous
Max working pressure (bar)	10
Temperature °C	-5 ÷ +50
Flow rate at 6 bar with Δp=1 (Nl/min)	1500
Orifice size (mm)	9
Pilot ports size	G1/8"

	WORKING PORTS SIZE
Ⓐ	**1** = G3/8"
	5 = G1/4"
	8 = Quick fitting tube Ø10

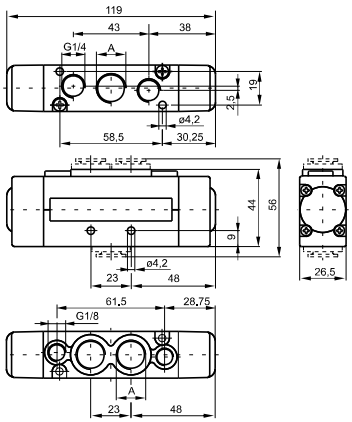

Weight 235 g
Minimum piloting pressure 1,5 bar

For dimension "A" see ordering code

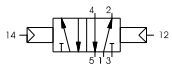

Solenoid-Spring/Differerential

Coding: 261Ⓐ.52.00.Ⓥ.Ⓣ

Operational characteristics	
Fluid	Filtered air. No lubrication needed, if applied it shall be continuous
Max working pressure (bar)	10
Temperature °C	-5 ÷ +50
Flow rate at 6 bar with Δp=1 (Nl/min)	1500
Orifice size (mm)	9

Ⓐ	WORKING PORTS SIZE
	1 = G3/8"
	5 = G1/4"
	8 = Quick fitting tube Ø10
Ⓥ	VERSION
	39 = Solenoid - Spring
	29 = Solenoid external-Spring
	36 = Solenoid-Differerential
	37 = Solenoid-Differential external
	26 = Solenoid external-Differerential
	27 = Solenoid external-Differential external
Ⓣ	VOLTAGE
	01 = 12V DC
	02 = 24V DC
	05 = 24V AC
	06 = 110V AC
	07 = 230 V AC
	08 = 24V DC 1W
	09 = 24V DC downward
	11 = 12V DC downward
	12 = 24V DC downward
	15 = 24V AC downward
	16 = 110V AC downward
	17 = 230 V AC downward
	18 = 24V DC 1W downward
	19 = 24V DC Earth faston downward

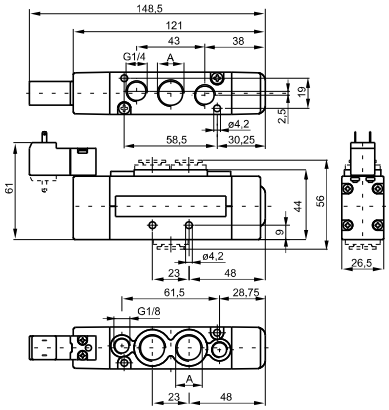

Weight 275 g
Minimum piloting pressure 2 bar

For dimension "A" see ordering code

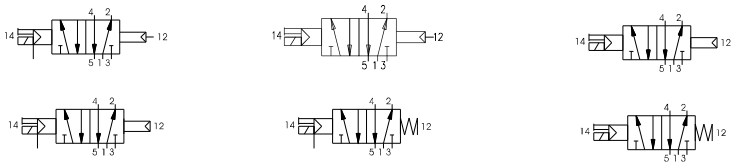

Solenoid - Solenoid

Coding: 261Ⓐ.52.00.Ⓥ.Ⓣ

Operational characteristics	
Fluid	Filtered air. No lubrication needed, if applied it shall be continuous
Max working pressure (bar)	10
Temperature °C	-5 ÷ +50
Flow rate at 6 bar with Δp=1 (Nl/min)	1500
Orifice size (mm)	9

Ⓐ	WORKING PORTS SIZE
	1 = G3/8"
	5 = G1/4"
	8 = Quick fitting tube Ø10
Ⓥ	VERSION
	35 = Solenoid-Solenoid
	24 = Solenoid external-Solenoid external
Ⓣ	VOLTAGE
	01 = 12V DC
	02 = 24V DC
	05 = 24V AC
	06 = 110V AC
	07 = 230 V AC
	08 = 24V DC 1W
	09 = 24V DC downward
	11 = 12V DC downward
	12 = 24V DC downward
	15 = 24V AC downward
	16 = 110V AC downward
	17 = 230 V AC downward
	18 = 24V DC 1W downward
	19 = 24V DC Earth faston downward

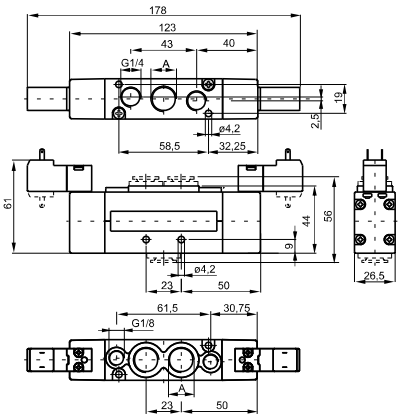

Weight 295 g
Minimum piloting pressure 1,5 bar

For dimension "A" see ordering code

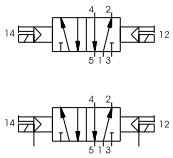

Pneumatic - Pneumatic 5 ways 3 connections

Coding: 261Ⓐ.53.Ⓕ.18

Operational characteristics	
Fluid	Filtered air. No lubrication needed, if applied it shall be continuous
Max working pressure (bar)	10
Temperature °C	-5 ÷ +50
Flow rate at 6 bar with Δp=1 (Nl/min)	1350
Orifice size (mm)	9
Pilot ports size	M5

Ⓐ	WORKING PORTS SIZE
	1 = G3/8"
	5 = G1/4"
	8 = Quick fitting tube Ø10
Ⓕ	FUNCTION
	31 = Closed centres
	32 = Open centres
	33 = Pressured centres

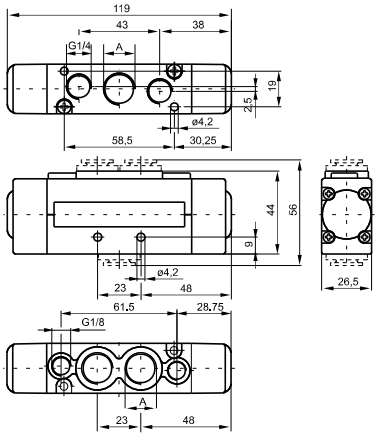

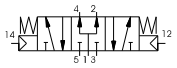

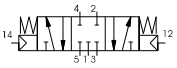

Weight 245 g
Minimum piloting pressure 3 bar

For dimension "A" see ordering code

Solenoid - Solenoid 5 ways 3 connections

Coding: 261Ⓐ.53.Ⓕ.Ⓥ.Ⓣ

Operational characteristics	
Fluid	Filtered air. No lubrication needed, if applied it shall be continuous
Max working pressure (bar)	10
Temperature °C	-5 ÷ +50
Flow rate at 6 bar with Δp=1 (Nl/min)	1350
Orifice size (mm)	9

Ⓐ	WORKING PORTS SIZE
	1 = G3/8"
	5 = G1/4"
	8 = Quick fitting tube Ø10
Ⓕ	FUNCTION
	31 = Closed centres
	32 = Open centres
	33 = Pressured centres
Ⓥ	VERSION
	24 = Solenoid external-Solenoid external
	35 = Solenoid-Solenoid
Ⓣ	VOLTAGE
	01 = 12V DC
	02 = 24V DC
	05 = 24V AC
	06 = 110V AC
	07 = 230 V AC
	08 = 24V DC 1W
	09 = 24V DC downward
	11 = 12V DC downward
	12 = 24V DC downward
	15 = 24V AC downward
	16 = 110V AC downward
	17 = 230 V AC downward
	18 = 24V DC 1W downward
	19 = 24V DC Earth faston downward

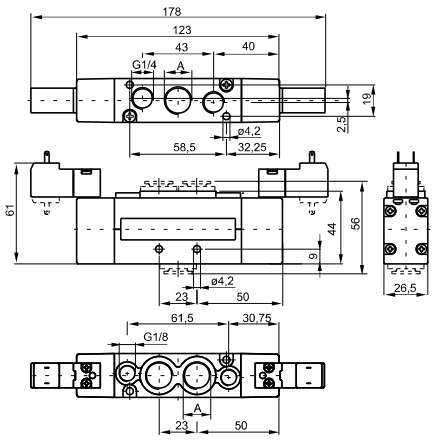

Weight 245 g
Minimum piloting pressure 3 bar

For dimension "A" see ordering code

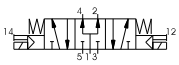

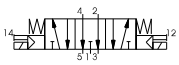

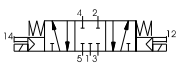

Pneumatic - Spring

Coding: 263Ⓐ.52.00.19

Operational characteristics	
Fluid	Filtered air. No lubrication needed, if applied it shall be continuous
Max working pressure (bar)	10
Temperature °C	-5 ÷ +50
Flow rate at 6 bar with Δp=1 (Nl/min)	1500
Orifice size (mm)	9
Pilot ports size	M5

	WORKING PORTS SIZE
Ⓐ	**1** = G3/8"
	5 = G1/4"
	8 = Quick fitting tube Ø10

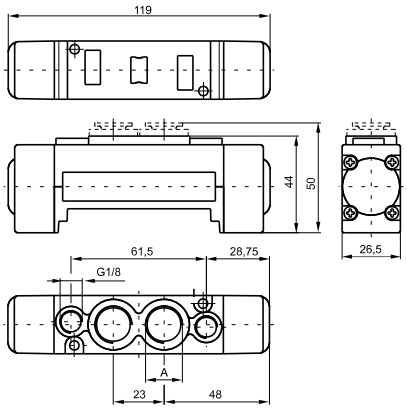

Weight 185 g
Minimum piloting pressure 2 bar

For dimension "A" see ordering code

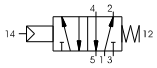

Pneumatic - Differential

Coding: 263Ⓐ.52.00.16

Operational characteristics	
Fluid	Filtered air. No lubrication needed, if applied it shall be continuous
Max working pressure (bar)	10
Temperature °C	-5 ÷ +50
Flow rate at 6 bar with Δp=1 (Nl/min)	1500
Orifice size (mm)	9
Pilot ports size	M5

	WORKING PORTS SIZE
Ⓐ	**1** = G3/8"
	5 = G1/4"
	8 = Quick fitting tube Ø10

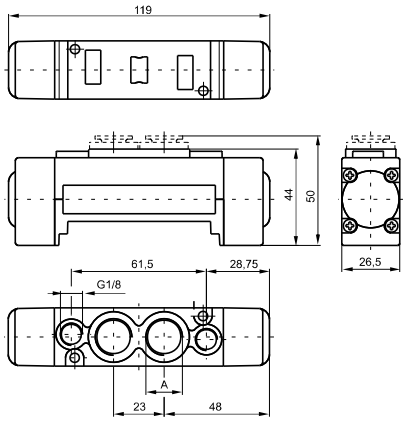

Weight 185 g
Minimum piloting pressure 2 bar

For dimension "A" see ordering code

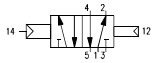

Pneumatic - Differential (External)

Coding: 263Ⓐ.52.00.17

Operational characteristics	
Fluid	Filtered air. No lubrication needed, if applied it shall be continuous
Max working pressure (bar)	10
Temperature °C	-5 ÷ +50
Flow rate at 6 bar with Δp=1 (Nl/min)	1500
Orifice size (mm)	9
Pilot ports size	M5

	WORKING PORTS SIZE
Ⓐ	**1** = G3/8"
	5 = G1/4"
	8 = Quick fitting tube Ø10

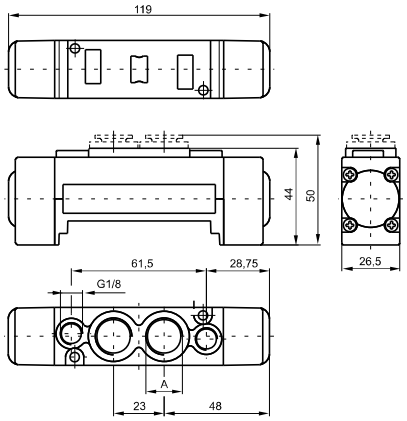

Weight 185 g
Minimum piloting pressure 2 bar

For dimension "A" see ordering code

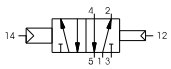

Pneumatic - Pneumatic

Coding: 263Ⓐ.52.00.18

Operational characteristics	
Fluid	Filtered air. No lubrication needed, if applied it shall be continuous
Max working pressure (bar)	10
Temperature °C	-5 ÷ +50
Flow rate at 6 bar with Δp=1 (Nl/min)	1500
Orifice size (mm)	9
Pilot ports size	M5

	WORKING PORTS SIZE
Ⓐ	**1** = G3/8"
	5 = G1/4"
	8 = Quick fitting tube Ø10

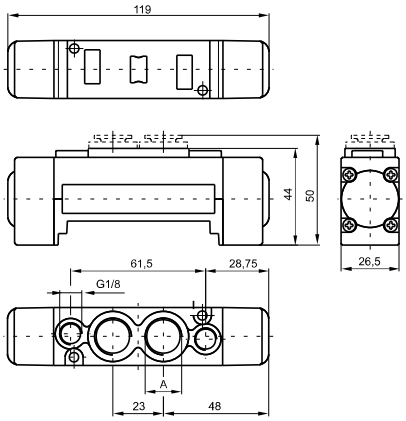

Weight 185 g
Minimum piloting pressure 1,5 bar

For dimension "A" see ordering code

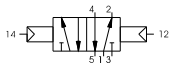

Solenoid-Spring / Differential

Coding: 263Ⓐ.52.00.Ⓥ.Ⓣ

Operational characteristics	
Fluid	Filtered air. No lubrication needed, if applied it shall be continuous
Max working pressure (bar)	10
Temperature °C	-5 ÷ +50
Flow rate at 6 bar with Δp=1 (Nl/min)	1500
Orifice size (mm)	9

Ⓐ	WORKING PORTS SIZE
	1 = G3/8"
	5 = G1/4"
	8 = Quick fitting tube Ø10
Ⓥ	VERSION
	39 = Solenoid - Spring
	29 = Solenoid external-Spring
	36 = Solenoid-Differerential
	37 = Solenoid-Differential external
	26 = Solenoid external-Differerential
	27 = Solenoid external-Differential external
Ⓣ	VOLTAGE
	01 = 12V DC
	02 = 24V DC
	05 = 24V AC
	06 = 110V AC
	07 = 230 V AC
	08 = 24V DC 1W
	09 = 24V DC downward
	11 = 12V DC downward
	12 = 24V DC downward
	15 = 24V AC downward
	16 = 110V AC downward
	17 = 230 V AC downward
	18 = 24V DC 1W downward
	19 = 24V DC Earth faston downward

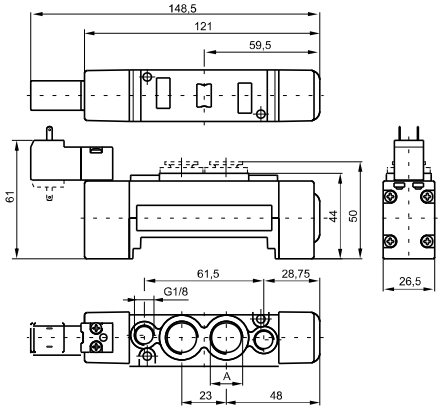

For dimension "A" see ordering code

Weight 220 g
Minimum piloting pressure 2 bar

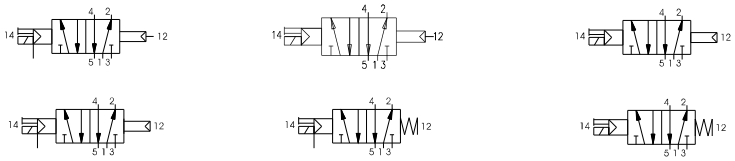

Solenoid - Solenoid

Coding: 263Ⓐ.52.00.Ⓥ.Ⓣ

Operational characteristics	
Fluid	Filtered air. No lubrication needed, if applied it shall be continuous
Max working pressure (bar)	10
Temperature °C	-5 ÷ +50
Flow rate at 6 bar with Δp=1 (Nl/min)	1500
Orifice size (mm)	9

Ⓐ	WORKING PORTS SIZE
	1 = G3/8"
	5 = G1/4"
	8 = Quick fitting tube Ø10
Ⓥ	VERSION
	35 = Solenoid-Solenoid
	24 = Solenoid external-Solenoid external
Ⓣ	VOLTAGE
	01 = 12V DC
	02 = 24V DC
	05 = 24V AC
	06 = 110V AC
	07 = 230 V AC
	08 = 24V DC 1W
	09 = 24V DC downward
	11 = 12V DC downward
	12 = 24V DC downward
	15 = 24V AC downward
	16 = 110V AC downward
	17 = 230 V AC downward
	18 = 24V DC 1W downward
	19 = 24V DC Earth faston downward

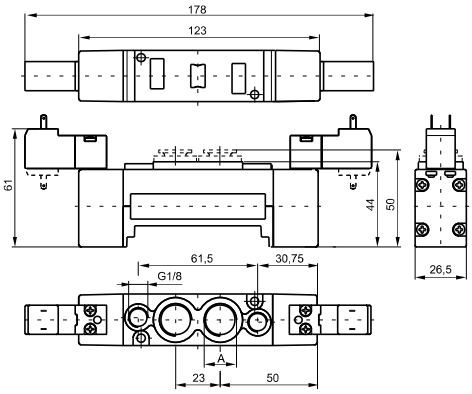

Weight 250 g
Minimum piloting pressure 1,5 bar

For dimension "A" see ordering code

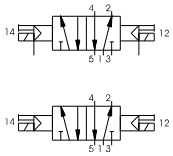

Pneumatic - Pneumatic 5 ways 3 connections

Coding: 263Ⓐ.53.Ⓕ.18

Operational characteristics	
Fluid	Filtered air. No lubrication needed, if applied it shall be continuous
Max working pressure (bar)	10
Temperature °C	-5 ÷ +50
Flow rate at 6 bar with Δp=1 (Nl/min)	1350
Orifice size (mm)	9
Pilot ports size	M5

Ⓐ	WORKING PORTS SIZE
	1 = G3/8"
	5 = G1/4"
	8 = Quick fitting tube Ø10
Ⓕ	FUNCTION
	31 = Closed centres
	32 = Open centres
	33 = Pressured centres

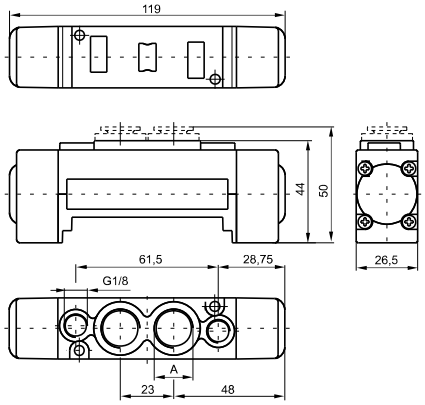

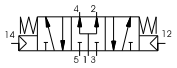

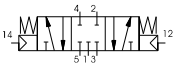

Weight 195 g
Minimum piloting pressure 3 bar

For dimension "A" see ordering code

Solenoid - Solenoid 5 ways 3 connections

Coding: 263Ⓐ.53.Ⓕ.Ⓥ.Ⓣ

Operational characteristics	
Fluid	Filtered air. No lubrication needed, if applied it shall be continuous
Max working pressure (bar)	10
Temperature °C	-5 ÷ +50
Flow rate at 6 bar with Δp=1 (Nl/min)	1350
Orifice size (mm)	9

Ⓐ	WORKING PORTS SIZE
	1 = G3/8"
	5 = G1/4"
	8 = Quick fitting tube Ø10
Ⓕ	FUNCTION
	31 = Closed centres
	32 = Open centres
	33 = Pressured centres
Ⓥ	VERSION
	24 = Solenoid external-Solenoid external
	35 = Solenoid-Solenoid
Ⓣ	VOLTAGE
	01 = 12V DC
	02 = 24V DC
	05 = 24V AC
	06 = 110V AC
	07 = 230 V AC
	08 = 24V DC 1W
	09 = 24V DC downward
	11 = 12V DC downward
	12 = 24V DC downward
	15 = 24V AC downward
	16 = 110V AC downward
	17 = 230 V AC downward
	18 = 24V DC 1W downward
	19 = 24V DC Earth faston downward

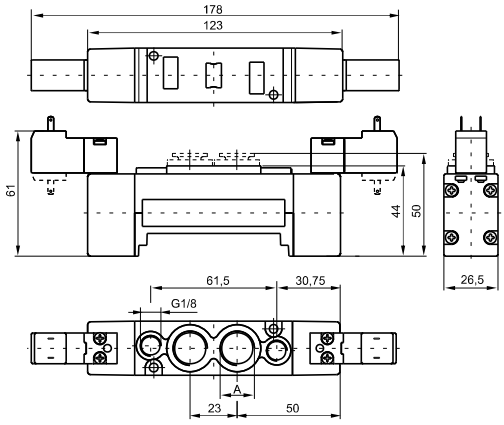

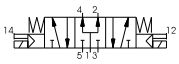

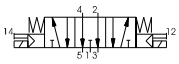

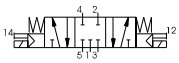

Weight 270 g
Minimum piloting pressure 3 bar

For dimension "A" see ordering code

Modular base

Coding: 2630.01

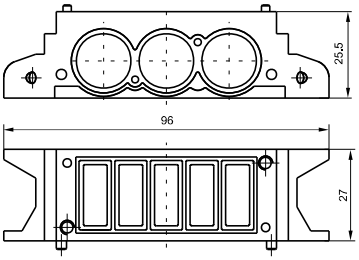

Weight 80 g

Inlet base

Coding: 2630.Ⓥ

Ⓥ	VERSION
	02 = Right
	03 = Left

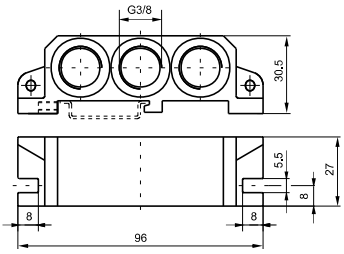

Weight 80 g

2630.02

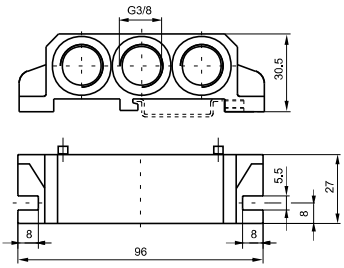

Weight 100 g

2630.03

Intermediate air intake

Coding: 2630.10

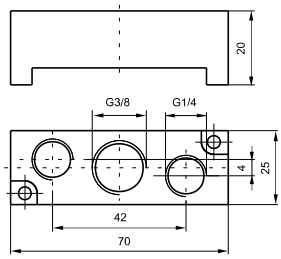

Weight 60 g
to be assembled instead of a valve

Closing plate

Coding: 2630.00

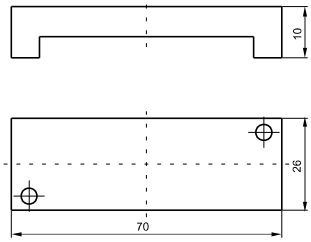

Weight 20 g

Diaphragm plug

Coding: 2630.17

Weight 5 g

Pneumatic - Spring

Coding: 2645.52.00.19

Operational characteristics	
Fluid	Filtered air. No lubrication needed, if applied it shall be continuous
Max working pressure (bar)	10
Temperature °C	-5 ÷ +50
Flow rate at 6 bar with Δp=1 (Nl/min)	1100
Orifice size (mm)	7.5

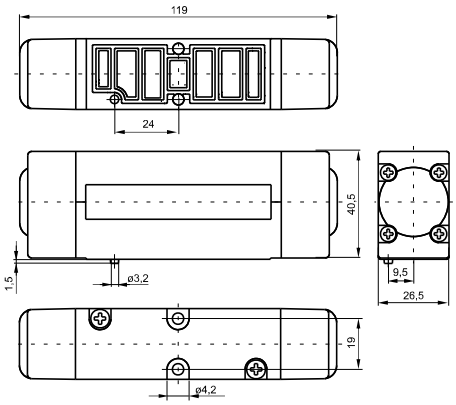

Weight 235 g
Minimum piloting pressure 2 bar

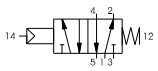

Pneumatic - Differential

Coding: 2645.52.00.16

Operational characteristics	
Fluid	Filtered air. No lubrication needed, if applied it shall be continuous
Max working pressure (bar)	10
Temperature °C	-5 ÷ +50
Flow rate at 6 bar with Δp=1 (Nl/min)	1100
Orifice size (mm)	7.5

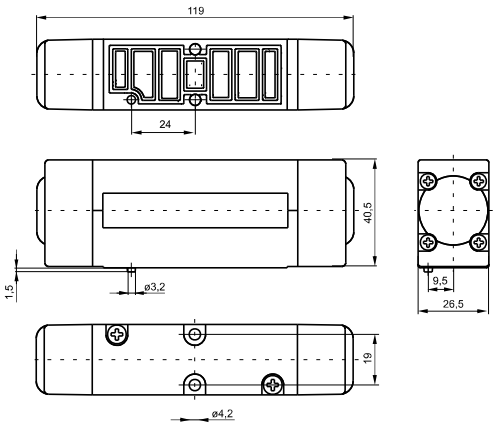

Weight 235 g
Minimum piloting pressure 2 bar

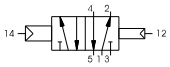

Pneumatic - Differential (External)

Coding: 2645.52.00.17

Operational characteristics	
Fluid	Filtered air. No lubrication needed, if applied it shall be continuous
Max working pressure (bar)	10
Temperature °C	-5 ÷ +50
Flow rate at 6 bar with Δp=1 (Nl/min)	1100
Orifice size (mm)	7.5

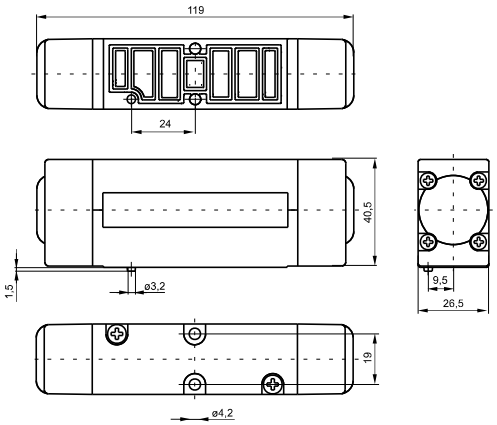

Weight 235 g
Minimum piloting pressure 2 bar

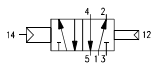

Pneumatic - Pneumatic

Coding: 2645.52.00.18

Operational characteristics	
Fluid	Filtered air. No lubrication needed, if applied it shall be continuous
Max working pressure (bar)	10
Temperature °C	-5 ÷ +50
Flow rate at 6 bar with Δp=1 (Nl/min)	1100
Orifice size (mm)	7.5

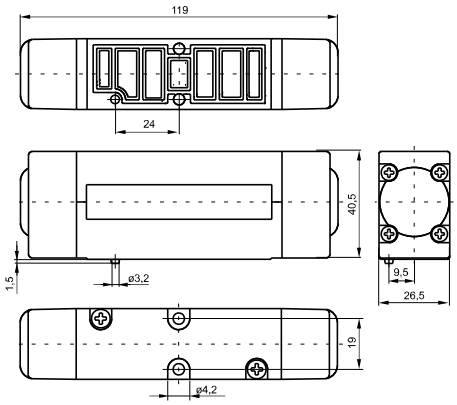

Weight 255 g
Minimum piloting pressure 1,5 bar

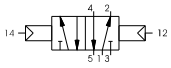

Solenoid-Spring / Differential

Coding: 264Ⓒ.52.00.Ⓥ.Ⓣ

Operational characteristics	
Fluid	Filtered air. No lubrication needed, if applied it shall be continuous
Max working pressure (bar)	10
Temperature °C	-5 ÷ +50
Flow rate at 6 bar with Δp=1 (Nl/min)	1100
Orifice size (mm)	7.5

Ⓒ	TYPE ELECTROPILOT EXHAUST
	1 = on base (only for self feeding valves)
	5 = on pilot (for all version)
Ⓥ	VERSION
	39 = Solenoid - Spring
	29 = Solenoid external-Spring
	36 = Solenoid-Differerential
	37 = Solenoid-Differential external
	26 = Solenoid external-Differerential
	27 = Solenoid external-Differential external
Ⓣ	VOLTAGE
	01 = 12V DC
	02 = 24V DC
	05 = 24V AC
	06 = 110V AC
	07 = 230 V AC
	08 = 24V DC 1W
	09 = 24V DC downward
	11 = 12V DC downward
	12 = 24V DC downward
	15 = 24V AC downward
	16 = 110V AC downward
	17 = 230 V AC downward
	18 = 24V DC 1W downward
	19 = 24V DC Earth faston downward

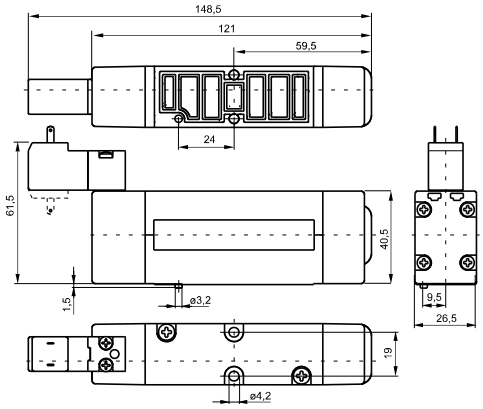

Weight 270 g
Minimum piloting pressure 2 bar

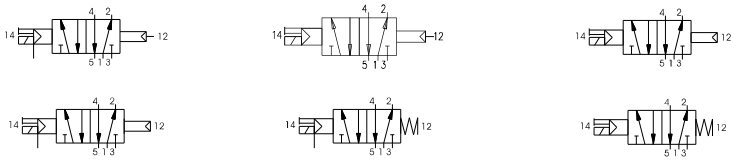

Solenoid - Solenoid

Coding: 264Ⓒ.52.00.Ⓥ.Ⓣ

Operational characteristics	
Fluid	Filtered air. No lubrication needed, if applied it shall be continuous
Max working pressure (bar)	10
Temperature °C	-5 ÷ +50
Flow rate at 6 bar with Δp=1 (Nl/min)	1100
Orifice size (mm)	7.5

Ⓒ	TYPE ELECTROPILOT EXHAUST
	1 = on base (only for self feeding valves)
	5 = on pilot (for all version)
Ⓥ	VERSION
	24 = Solenoid external-Solenoid external
	35 = Solenoid-Solenoid
Ⓣ	VOLTAGE
	01 = 12V DC
	02 = 24V DC
	05 = 24V AC
	06 = 110V AC
	07 = 230 V AC
	08 = 24V DC 1W
	09 = 24V DC downward
	11 = 12V DC downward
	12 = 24V DC downward
	15 = 24V AC downward
	16 = 110V AC downward
	17 = 230 V AC downward
	18 = 24V DC 1W downward
	19 = 24V DC Earth faston downward

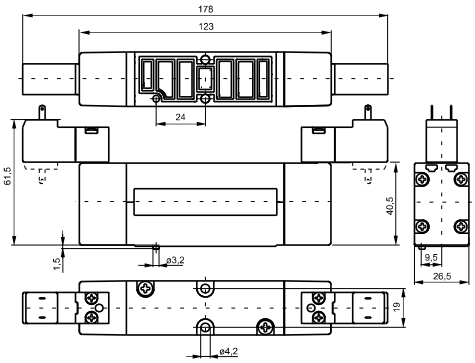

Weight 305 g
Minimum piloting pressure 1,5 bar

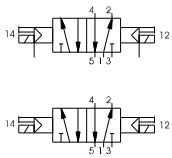

Pneumatic - Pneumatic 5 ways 3 connections

Coding: 264Ⓒ.53.Ⓕ.18

Operational characteristics	
Fluid	Filtered air. No lubrication needed, if applied it shall be continuous
Max working pressure (bar)	10
Temperature °C	-5 ÷ +50
Flow rate at 6 bar with Δp=1 (Nl/min)	1000
Orifice size (mm)	7.5

Ⓒ	TYPE ELECTROPILOT EXHAUST
	1 = on base (only for self feeding valves)
	5 = on pilot (for all version)
Ⓕ	FUNCTION
	31 = Closed centres
	32 = Open centres
	33 = Pressured centres

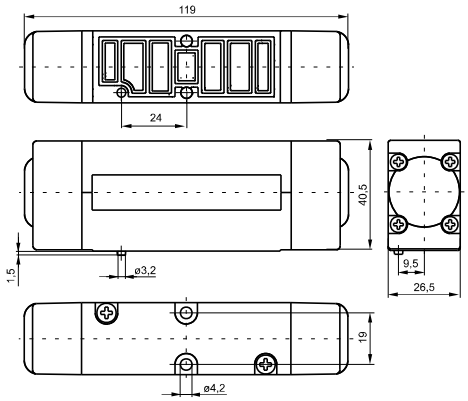

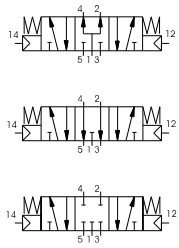

Weight 245 g
Minimum piloting pressure 3 bar

Solenoid - Solenoid 5 ways 3 connections

Coding: 264Ⓒ.53.Ⓕ.Ⓥ.Ⓣ

Operational characteristics	
Fluid	Filtered air. No lubrication needed, if applied it shall be continuous
Max working pressure (bar)	10
Temperature °C	-5 ÷ +50
Flow rate at 6 bar with Δp=1 (Nl/min)	1000
Orifice size (mm)	5

Ⓒ	TYPE ELECTROPILOT EXHAUST
	1 = on base (only for self feeding valves)
	5 = on pilot (for all version)
Ⓕ	FUNCTION
	31 = Closed centres
	32 = Open centres
	33 = Pressured centres
Ⓥ	VERSION
	24 = Solenoid external-Solenoid external
	35 = Solenoid-Solenoid
Ⓣ	VOLTAGE
	01 = 12V DC
	02 = 24V DC
	05 = 24V AC
	06 = 110V AC
	07 = 230 V AC
	08 = 24V DC 1W
	09 = 24V DC downward
	11 = 12V DC downward
	12 = 24V DC downward
	15 = 24V AC downward
	16 = 110V AC downward
	17 = 230 V AC downward
	18 = 24V DC 1W downward
	19 = 24V DC Earth faston downward

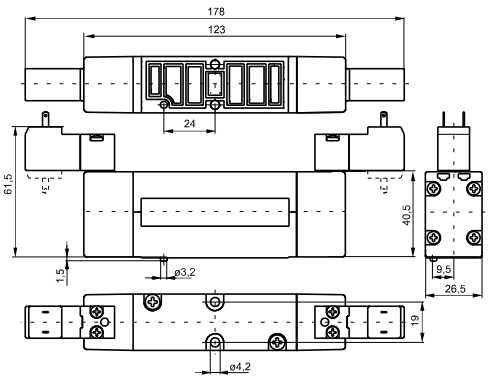

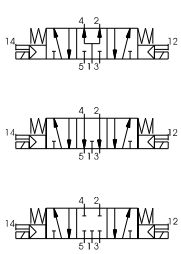

Weight 315 g
Minimum piloting pressure 3 bar

Modular base

Coding: 2640.Ⓥ

Ⓥ	VERSION
	01 = Standard base
	11 = Base for single separate inlet

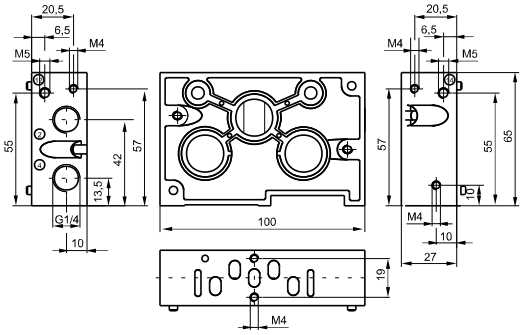

Weight 220 g

Inlet base

Coding: 2640.Ⓥ

Ⓥ	VERSION
	02 = Right
	03 = Left

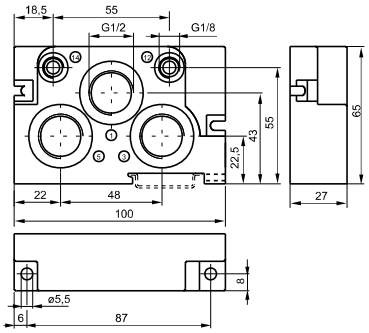

Weight 200 g

2640.02

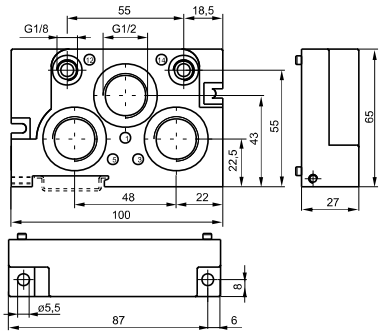

Weight 200 g

2640.03

Intermediate air intake

Coding: 2640.10

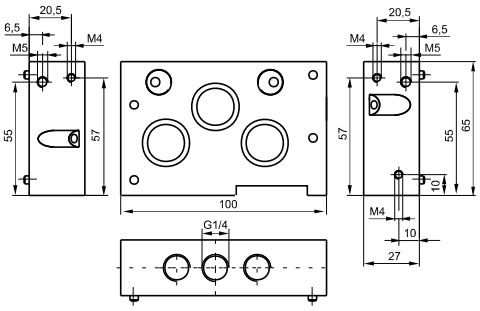

Closing plate

Coding: 2640.00

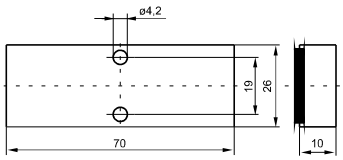

Weight 50 g

Diaphragm plug

Coding: 2640.17

Weight 10 g