## Series 2700

### General

The 2700 Series of solenoid operated valves have been designed in accordance with ISO 15407, a standard for both pneumatic and electrical layout.
This series of valves have a 27mm valve body width and a nominal flow rate of 1000 Nl/Min.
The solenoid valves are mounted upon a modular sub-base with G1/4" pneumatic connections and built in electrical connection.
Another feature of the 2700 series is that it can be equipped with the serial bus modules currently being used with our Optyma-T valve series, thus offering an extremely flexible product that can be integrated with standard communication protocols (CANopen®, PROFIBUS DP, DeviceNet, EtherNet/IP, PROFINET IO RT/IRT, EtherCAT®, Powerlink and Modbus/TCP).
In addition to the serial bus modules, the valves manifolds can also be used with either a 25 or 37 pin D-SUB connectors offering control of up to a maximum of 32 electrical signals.

**"Shifting time of pneumatic directional control valves or moving parts, logic devices were measured in accordance to ISO 12238:2001, Pneumatic fluid power-Directional control valves-Measurement of shifting time"**



### Main characteristics

Integrated and optimized electrical connection system.
IP65 protection degree.
Only one 26mm size.
Monostable and bistable solenoid valves with the same size dimensions.
G1/4" quick coupling connections.
Easy and fast manifold assembling.

### Construction characteristics

| | |
|---|---|
| Body | Aluminium |
| Operators | Technopolymer |
| Spacers | HNBR 75-80 Shore A |
| Spools | Aluminium |
| Springs | AISI 302 stainless steel |
| Pistons | Technopolymer |
| Piston seals | NBR |

### Functions

SV 5/2 MONOSTABLE SOLENOID-SPRING
SV 5/2 MONOSTABLE SOLENOID-DIFFERENTIAL
SV 5/2 BISTABLE SOLENOID-SOLENOID
SV 5/3 C.C. SOLENOID-SOLENOID
SV 2x3/2 N.C.-N.C. (=5/3 O.C.) SOLENOID-SOLENOID
SV 2x3/2 N.O.-N.O. (=5/3 P.C.) SOLENOID-SOLENOID
SV 2x3/2 N.C.-N.O. SOLENOID-SOLENOID

### Technical characteristics

| | |
|---|---|
| Voltage | 24 VDC ±10% PNP |
| Pilot consumption | 1 Watt - 2,3Watt |
| Valve working pressure [1] | from vacuum up to 10 bar |
| Operating temperature | -5°C +50°C |
| Life (standard operating conditions) | 50000000 |
| Fluid | Filtered air. No lubrication needed, if applied it shall be continuous |

## Solenoid - Spring

**Coding:** 2741.52.00.Ⓟ.Ⓣ

| Operational characteristics | |
|---|---|
| Fluid | Filtered air. No lubrication needed, if applied it shall be continuous |
| Working pressure (bar) | From vacuum to 10 |
| Minimum piloting pressure (bar) | 2 |
| Temperature °C | -5 ÷ +50 |
| Flow rate at 6 bar with Δp=1 (Nl/min) | 1000 |
| Responce time according to ISO 12238, activation time (ms) | 20 |
| Responce time according to ISO 12238, deactivation time (ms) | 38 |

*Shifting time of pneumatic directional control valves or moving parts, logic devices were measured in accordance to ISO 12238:2001*

| | |
|---|---|
| Ⓟ | PILOTING |
| | **39** = Self feeding |
| | **29** = External feeding |
| Ⓣ | VOLTAGE |
| | **01** = 12V DC |
| | **02** = 24V DC |
| | **08** = 24V DC 1 Watt |

SHORT FUNCTION (Self feeding) "AA"
SHORT FUNCTION (External feeding) "AE"
Weight 280 g

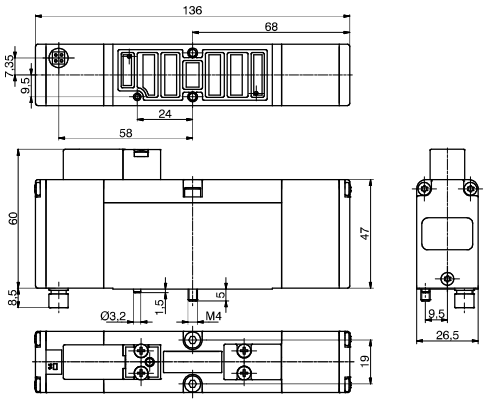


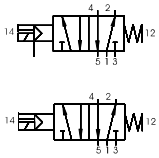


The "Activations time" values, are valid only for the 2,3W versions

## Solenoid-Differential

**Coding:** 2741.52.00.Ⓟ.Ⓣ

| Operational characteristics | |
|---|---|
| Fluid | Filtered air. No lubrication needed, if applied it shall be continuous |
| Working pressure (bar) | From vacuum to 10 |
| Minimum piloting pressure (bar) | 2 |
| Temperature °C | -5 ÷ +50 |
| Flow rate at 6 bar with Δp=1 (Nl/min) | 1000 |
| Responce time according to ISO 12238, activation time (ms) | 20 |
| Responce time according to ISO 12238, deactivation time (ms) | 38 |

*Shifting time of pneumatic directional control valves or moving parts, logic devices were measured in accordance to ISO 12238:2001*

| | |
|---|---|
| Ⓟ | PILOTING |
| | **36** = Self feeding |
| | **26** = External feeding |
| Ⓣ | VOLTAGE |
| | **01** = 12V DC |
| | **02** = 24V DC |
| | **08** = 24V DC 1 Watt |

SHORT FUNCTION (Self feeding) "BA"
SHORT FUNCTION (External feeding) "BE"
Weight 280 g

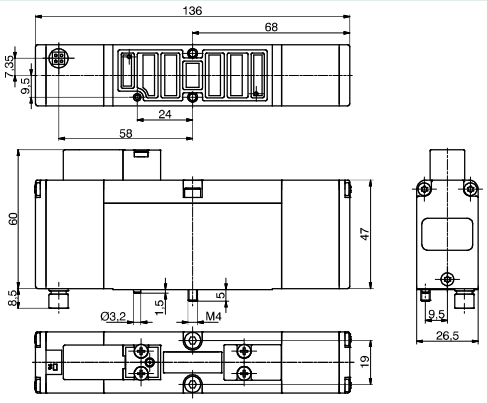


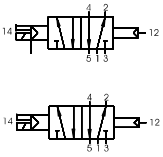


The "Activations time" values, are valid only for the 2,3W versions

## Solenoid-Solenoid 5/2

**Coding:** 2741.52.00.Ⓟ.Ⓣ

| Operational characteristics | |
|---|---|
| Fluid | Filtered air. No lubrication needed, if applied it shall be continuous |
| Working pressure (bar) | From vacuum to 10 |
| Minimum piloting pressure (bar) | 2 |
| Temperature °C | -5 ÷ +50 |
| Flow rate at 6 bar with Δp=1 (Nl/min) | 1000 |
| Responce time according to ISO 12238, activation time (ms) | 12 |
| Responce time according to ISO 12238, deactivation time (ms) | 14 |

*Shifting time of pneumatic directional control valves or moving parts, logic devices were measured in accordance to ISO 12238:2001*

| | |
|---|---|
| Ⓟ | PILOTING |
| | **35** = Self feeding |
| | **24** = External feeding |
| Ⓣ | VOLTAGE |
| | **01** = 12V DC |
| | **02** = 24V DC |
| | **08** = 24V DC 1 Watt |

SHORT FUNCTION (Self feeding) "CA"
SHORT FUNCTION (External feeding) "CE"
Weight 310 g

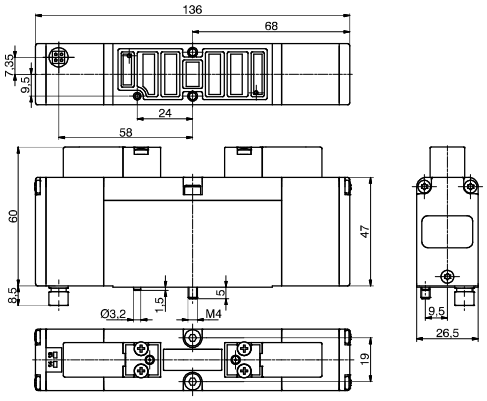


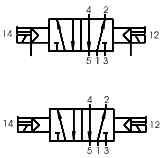


The "Activations time" values, are valid only for the 2,3W versions

## Solenoid-Solenoid 5/3

**Coding:** 2741.53.31.Ⓟ.Ⓣ

| Operational characteristics | |
|---|---|
| Fluid | Filtered air. No lubrication needed, if applied it shall be continuous |
| Working pressure (bar) | From vacuum to 10 |
| Minimum piloting pressure (bar) | 3 |
| Temperature °C | -5 ÷ +50 |
| Flow rate at 6 bar with Δp=1 (Nl/min) | 660 |
| Responce time according to ISO 12238, activation time (ms) | 12 |
| Responce time according to ISO 12238, deactivation time (ms) | 60 |

*Shifting time of pneumatic directional control valves or moving parts, logic devices were measured in accordance to ISO 12238:2001*

| | |
|---|---|
| Ⓟ | PILOTING |
| | **35** = Self feeding |
| | **24** = External feeding |
| Ⓣ | VOLTAGE |
| | **01** = 12V DC |
| | **02** = 24V DC |
| | **08** = 24V DC 1 Watt |

SHORT FUNCTION (Self feeding) "EA"
SHORT FUNCTION (External feeding) "EE"

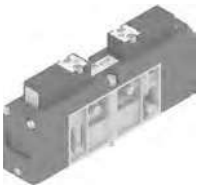

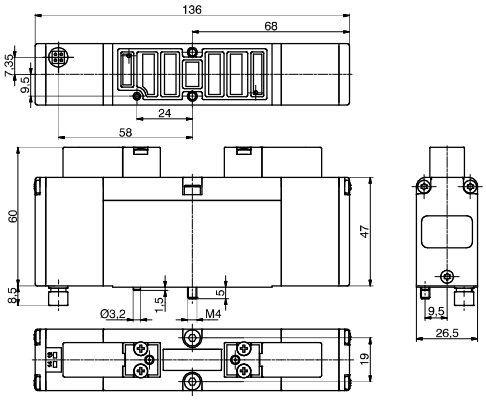


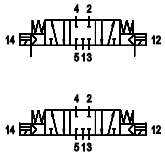


Weight 310 g
The "Activations time" values, are valid only for the 2,3W versions

## Solenoid-Solenoid 2x3/2 (Self feeding / External feeding)

**Coding:** 2741.62.Ⓕ.Ⓟ.Ⓣ

| Operational characteristics | |
|---|---|
| Fluid | Filtered air. No lubrication needed, if applied it shall be continuous |
| Working pressure (bar) | From vacuum to 10 |
| Minimum piloting pressure (bar) | ≥2+(0,3xP.alim.) |
| Temperature °C | -5 ÷ +50 |
| Flow rate at 6 bar with Δp=1 (Nl/min) | 550 |
| Responce time according to ISO 12238, activation time (ms) | 15 (Self feeding)<br>12 (External feeding) |
| Responce time according to ISO 12238, deactivation time (ms) | 15 (Self feeding)<br>60 (External feeding) |

*Shifting time of pneumatic directional control valves or moving parts, logic devices were measured in accordance to ISO 12238:2001*

| | |
|---|---|
| Ⓕ | FUNCTION |
| | **44** = 2 Coils 3/2 NC |
| | **45** = 1 Coil 3/2 NC (14) + 1 Coil 3/2 NO (12) |
| | **55** = 2 Coils 3/2 NO |
| | **54** = 1 Coil 3/2 NO (14) + 1 Coil 3/2 NC (12) |
| Ⓟ | PILOTING |
| | **35** = Self feeding |
| | **24** = External feeding |
| Ⓣ | VOLTAGE |
| | **01** = 12V DC |
| | **02** = 24V DC |
| | **08** = 24V DC 1 Watt |

SHORT FUNCTION (Self feeding):
2 3/2 NC="FA"
1 3/2 NC (14) + 1 3/2 NA (12)="HA"
2 3/2 NA="GA"
1 3/2 NA (14) + 1 3/2 NC (12)="IA"
SHORT FUNCTION (External feeding):
2 3/2 NC="FE"
1 3/2 NC (14) + 1 3/2 NA (12)="HE"
2 3/2 NA="GE"
1 3/2 NA (14) + 1 3/2 NC (12)="IE"

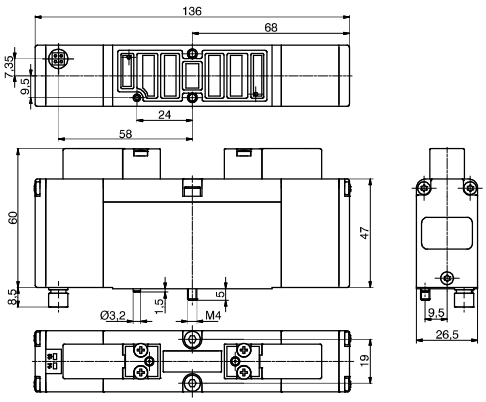


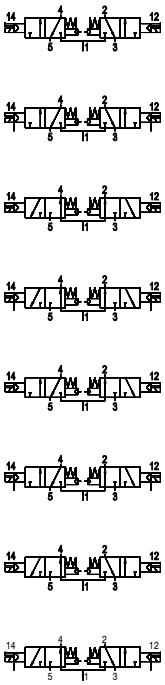


Weight 310 g
The "Activations time" values, are valid only for the 2,3W versions
"Example: If inlet pressure is set at 5bar then pilot pressure must be at least Pp=2+(0.3*5)=3,5bar"

## Right Endplates

**Coding:** 2740.02.Ⓒ

| Operational characteristics | |
|---|---|
| Fluid | Filtered air. No lubrication needed, if applied it shall be continuous |
| Working pressure (bar) | From vacuum to 10 |
| Temperature °C | -5 ÷ +50 |

| | ELECTRICAL CONNECTION | | |
|---|---|---|---|
| Ⓒ | **37P** PNP | = | Connectors 37 poles |
| | **25P** PNP | = | Connectors 25 poles |
| | **37N** NPN | = | Connectors 37 poles |
| | **25N** NPN | = | Connectors 25 poles |

Weight 600 g

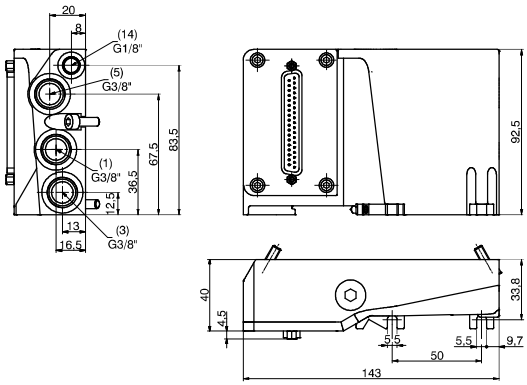


## Left Endplates

**Coding:** 2740.03.Ⓒ

| Operational characteristics | |
|---|---|
| Fluid | Filtered air. No lubrication needed, if applied it shall be continuous |
| Working pressure (bar) | From vacuum to 10 |
| Temperature °C | -5 ÷ +50 |

| | ELECTRICAL CONNECTION | | |
|---|---|---|---|
| Ⓒ | **00** | = | Electrical connection |
| | **25P** | = | Connectors 25 poles |

Weight 600 g

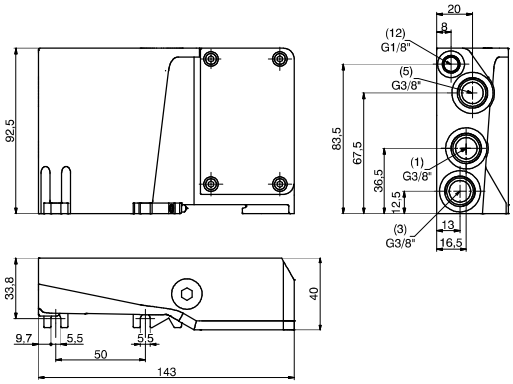


## Modular base

**Coding:** 2740.01Ⓥ

| Operational characteristics | |
|---|---|
| Fluid | Filtered air. No lubrication needed, if applied it shall be continuous |
| Working pressure (bar) | From vacuum to 10 |
| Temperature °C | -5 ÷ +50 |

| | VERSION |
|---|---|
| Ⓥ | **M** = for Monostable SV |
| | **B** = for Bistable SV |

Weight 330 g

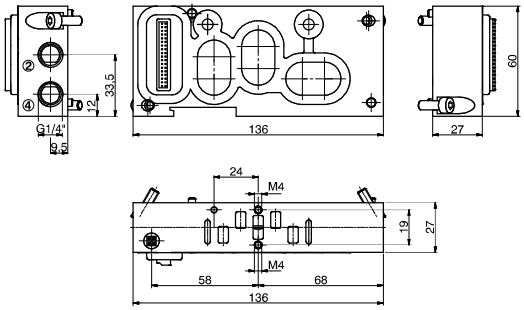

## Closing plate

**Coding:** 2740.00

Weight 100 g

| Operational characteristics | |
|---|---|
| Fluid | Filtered air. No lubrication needed, if applied it shall be continuous |
| Working pressure (bar) | From vacuum to 10 |
| Temperature °C | -5 ÷ +50 |

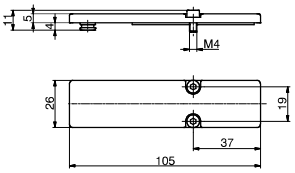


## Diaphragm plug

**Coding:** 2740.17

Weight 65 g

## Cable complete with connector, 25 Poles IP65

**Coding:** 2300.25.Ⓛ.Ⓒ

| | |
|---|---|
| Ⓛ | CABLE LENGTH |
| | **03** = 3 meters |
| | **05** = 5 meters |
| | **10** = 10 meters |
| Ⓕ | FUNCTION |
| | **31** = Closed centres |
| | **32** = Open centres |
| | **33** = Pressured centres |

## Cable complete with connector, 37 Poles IP65

**Coding:** 2400.37.Ⓛ.Ⓒ

| | |
|---|---|
| Ⓛ | CABLE LENGTH |
| | **03** = 3 meters |
| | **05** = 5 meters |
| | **10** = 10 meters |
| Ⓕ | FUNCTION |
| | **31** = Closed centres |
| | **32** = Open centres |
| | **33** = Pressured centres |

## Cable complete with connector, 25 Poles IP65

**Coding:** 2400.25.Ⓛ.25

| | |
|---|---|
| Ⓛ | CABLE LENGTH |
| | **03** = 3 meters |
| | **05** = 5 meters |
| | **10** = 10 meters |