Series 400

General

These are 2 stage valves actuated electro-pneumatically. A serie 300 directly operated solenoid valve actuates pneumatically the principal power distributor.
This integrated system allows configurations of systems requiring very little space.
The pilot air is normally taken from the inlet port (autofeed) and the only actuating signal is electric.
The range of the solenoid valves, as far as dimensions and mechanical construction, is similar to series 200.
We have therefore solenoid valves G 1/8", G 1/4", G 1/2" and G 1" with identical pneumatic characteristics that are, however, actuated electrically.
They have a balanced spool, insentive to presence or absence of pressure. They are constructed in 3 and 5 way with 1 solenoid (monostable) or 2 solenoids (bistable) and also 5 ways 3 positions with closed centres, open centres and pressured centres.
If should be noted that the autofeed of the electric pilot requires always inlet through port 1 and if a 3 ways normally open configuration is desired, it is necessary to switch the operators.
Solenoid valves G 1/8" and G 1/4" can be equipped with microsolenoids as well as standard solenoids and they can be mounted in line or in 90 degrees on valves.
Please note that while the microsolenoid can be mounted in any direction, standard solenoid requires mounting as inticated in the photographs and diagrams.

The order codes pertain only to the solenoid valve with mechanical actuator "M2" or solenoid "S*" already assembled.
M2 coils are not included and have to be ordered separately (see Series 300).
Coils for M2 and solenoids "S" homologated are available (see Series 300).

Construction characteristics

Body	Aluminium
Operators	Aluminium Technopolymer for spring botton plate G 1/8", G1/4", G 1/2" and aluminium for G 1"
Seals	NBR Polyurethane compound for oil free applications (G 1/8", G 1/4" and G 1/2")
Spacer	Technopolymer (aluminium for G1")
Spools	Steel
Springs	Stainless steel or spring steel

Use and maintenance

This valves have an average life of 15 million cycles depending on the application and air quality.
Filtered and lubricated air using specified lubricants will reduce the wear of the seals and ensures long and trouble free operation.
Please ensure that the valve is being used according with the manufacturers specification, such as air pressure and temperature.
The exhaust port of the distributor has to be protected in a dusty and dirty environment.
Repair kits including the spool complete with seals are available for overhauling the valves.
However, although this is a simple operation it should be carried out by a competent person.

ATTENTION: use hydraulic oil class H for lubrication such as MAGNA GC 32 (Castrol).

Solenoid - Spring

Coding: 468.❶.0.1.M2

Operational characteristics	
Fluid	Filtered air. No lubrication needed, if applied it shall be continuous
Max working pressure (bar)	10
Temperature °C	-5 ÷ +50
Flow rate at 6 bar with Δp=1 (Nl/min)	540
Orifice size (mm)	6
Working ports size	G 1/8"

❶	TYPE
	32 = 3 ways
	52 = 5 ways

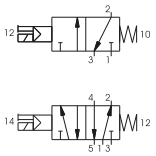

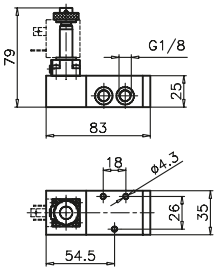

Weight 240 g
Minimum working pressure 2,5 bar

468.32.0.1.M2

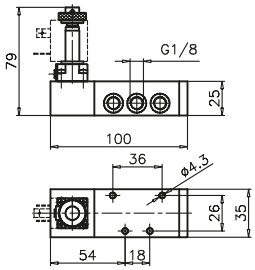

Weight 240 g
Minimum working pressure 2,5 bar

468.52.0.1.M2

Solenoid - Differential

Coding: 468.❶.0.12.M2

Operational characteristics	
Fluid	Filtered air. No lubrication needed, if applied it shall be continuous
Max working pressure (bar)	10
Temperature °C	-5 ÷ +50
Flow rate at 6 bar with Δp=1 (Nl/min)	540
Orifice size (mm)	6
Working ports size	G 1/8"

❶	TYPE
	32 = 3 ways
	52 = 5 ways

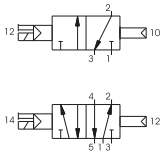

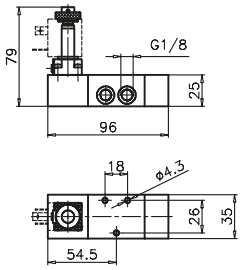

Weight 280 g
Minimum working pressure 2,5 bar

468.32.0.12.M2

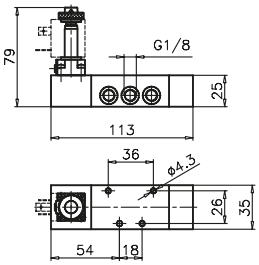

Weight 320 g
Minimum working pressure 2,5 bar

468.52.0.12.M2

Solenoid - Solenoid

Coding: 468.❶.0.0.M2

Operational characteristics	
Fluid	Filtered air. No lubrication needed, if applied it shall be continuous
Max working pressure (bar)	10
Temperature °C	-5 ÷ +50
Flow rate at 6 bar with Δp=1 (Nl/min)	540
Orifice size (mm)	6
Working ports size	G 1/8"

❶	TYPE
	32 = 3 ways
	52 = 5 ways

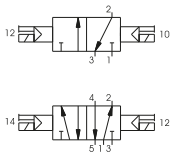

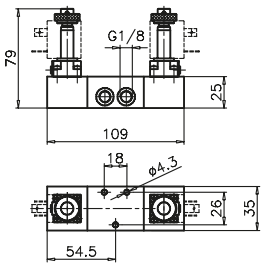

Weight 370 g
Minimum working pressure 2 bar

468.32.0.0.M2

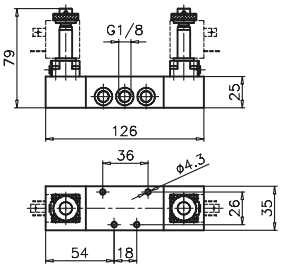

Weight 410 g
Minimum working pressure 2 bar

468.52.0.0.M2

Solenoid - Solenoid 5 ways 3 connections

Coding: 468.53.Ⓕ.0.0.M2

Operational characteristics	
Fluid	Filtered air. No lubrication needed, if applied it shall be continuous
Max working pressure (bar)	10
Temperature °C	-5 ÷ +50
Flow rate at 6 bar with Δp=1 (Nl/min)	410
Orifice size (mm)	6
Working ports size	G 1/8"

Ⓕ	FUNCTION
	31 = Closed centres
	32 = Open centres
	33 = Pressured centres

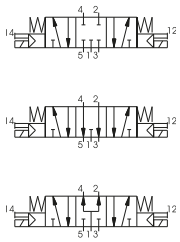

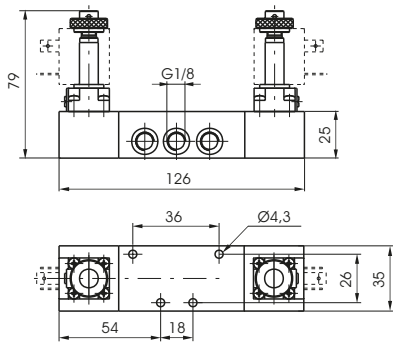

Weight 420 g
Minimum working pressure 3 bar

Solenoid - Spring

Coding: 468/1.Ⓣ.0.1.M2

Operational characteristics	
Fluid	Filtered air. No lubrication needed, if applied it shall be continuous
Max working pressure (bar)	10
Temperature °C	-5 ÷ +50
Flow rate at 6 bar with Δp=1 (Nl/min)	540
Orifice size (mm)	6
Working ports size	G 1/8"

Ⓣ	TYPE
	32 = 3 ways
	52 = 5 ways

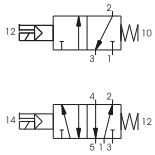

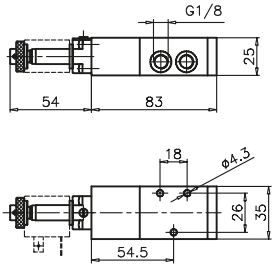

Weight 240 g
Minimum working pressure 2,5 bar

468/1.32.0.1.M2

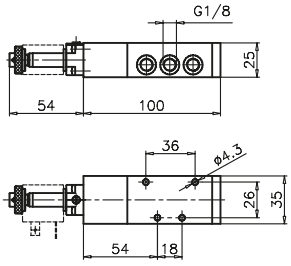

Weight 280 g
Minimum working pressure 2,5 bar

468/1.52.0.1.M2

Solenoid - Differential

Coding: 468/1.Ⓣ.0.12.M2

Operational characteristics	
Fluid	Filtered air. No lubrication needed, if applied it shall be continuous
Max working pressure (bar)	10
Temperature °C	-5 ÷ +50
Flow rate at 6 bar with Δp=1 (Nl/min)	540
Orifice size (mm)	6
Working ports size	G 1/8"

Ⓣ	TYPE
	32 = 3 ways
	52 = 5 ways

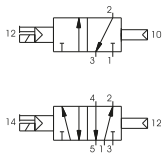

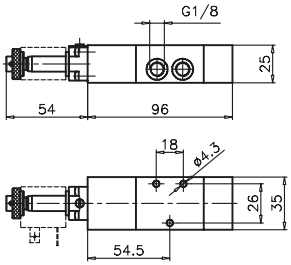

Weight 280 g
Minimum working pressure 2,5 bar

468/1.32.0.12.M2

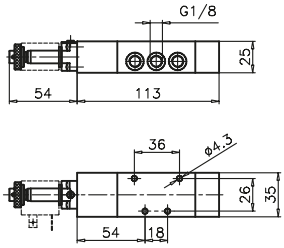

Weight 320 g
Minimum working pressure 2,5 bar

468/1.52.0.12.M2

Solenoid - Solenoid

Coding: 468/1.Ⓣ.0.0.M2

Operational characteristics	
Fluid	Filtered air. No lubrication needed, if applied it shall be continuous
Max working pressure (bar)	10
Temperature °C	-5 ÷ +50
Flow rate at 6 bar with Δp=1 (Nl/min)	540
Orifice size (mm)	6
Working ports size	G 1/8"

Ⓣ	TYPE
	32 = 3 ways
	52 = 5 ways

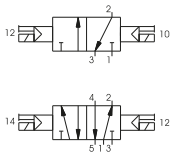

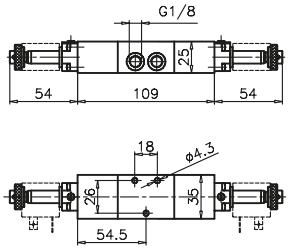

Weight 370 g
Minimum working pressure 2 bar

468/1.32.0.0.M2

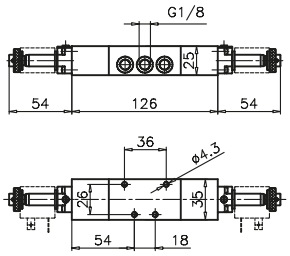

Weight 410 g
Minimum working pressure 2 bar

468/1.52.0.0.M2

Solenoid - Solenoid 5 ways 3 connections

Coding: 468/1.53.Ⓕ.0.0.M2

Operational characteristics	
Fluid	Filtered air. No lubrication needed, if applied it shall be continuous
Max working pressure (bar)	10
Temperature °C	-5 ÷ +50
Flow rate at 6 bar with Δp=1 (Nl/min)	410
Orifice size (mm)	6
Working ports size	G 1/8"

Ⓕ	FUNCTION
	31 = Closed centres
	32 = Open centres
	33 = Pressured centres

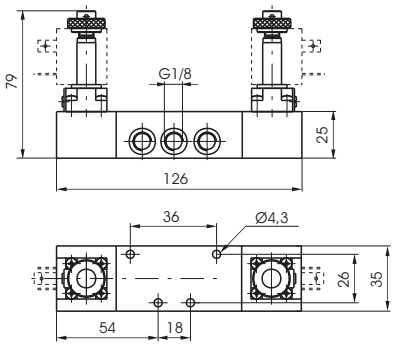

Weight 420 g
Minimum working pressure 3 bar

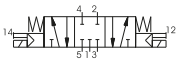

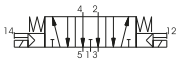

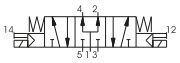

Solenoid - Spring

Coding: 488.Ⓣ.0.1.Ⓢ

Operational characteristics	
Fluid	Filtered air. No lubrication needed, if applied it shall be continuous
Max working pressure (bar)	10
Temperature °C	-5 ÷ +50
Flow rate at 6 bar with Δp=1 (Nl/min)	620
Orifice size (mm)	6
Working ports size	G 1/8"
Responce time according to ISO 12238, activation time (ms)	20,3 (3 ways) 22,5 (5 ways)
Responce time according to ISO 12238, deactivation time (ms)	44,5 (3 ways) 47,0 (5 ways)

Ⓣ	TYPE
	32 = 3 ways
	52 = 5 ways

Shifting time of pneumatic directional control valves or moving parts, logic devices were measured in accordance to ISO 12238:2001

Ⓢ	SOLENOID
	M11 = 24V D.C. (rating power 3,8W)
	M56 = 24V 50/60Hz (starting power 9VA, rating power 6VA)
	M57 = 110 V 50/60Hz (starting power 9 A, rating power 6 A)
	M58 = 230V 50/60Hz (starting power 9VA, rating power 6VA)

Weight 220 g
Minimum working pressure 2,5 bar

488.32.0.1.Ⓢ

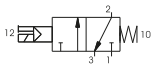

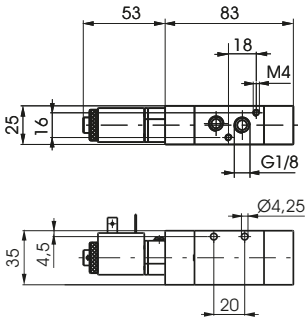

Weight 260 g
Minimum working pressure 2,5 bar

488.52.0.1.Ⓢ

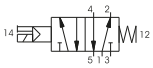

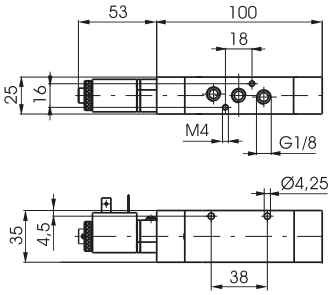

Solenoid - Differential

Coding: 488.Ⓣ.0.12.Ⓢ

Operational characteristics	
Fluid	Filtered air. No lubrication needed, if applied it shall be continuous
Max working pressure (bar)	10
Temperature °C	-5 ÷ +50
Flow rate at 6 bar with Δp=1 (Nl/min)	620
Orifice size (mm)	6
Working ports size	G 1/8"
Responce time according to ISO 12238, activation time (ms)	28,0 (3 ways) 28,3 (5 ways)
Responce time according to ISO 12238, deactivation time (ms)	34,5 (3 ways) 35,5 (5 ways)

Ⓣ	TYPE
	32 = 3 ways
	52 = 5 ways

Shifting time of pneumatic directional control valves or moving parts, logic devices were measured in accordance to ISO 12238:2001

Ⓢ	SOLENOID
	M11 = 24V D.C. (rating power 3,8W)
	M56 = 24V 50/60Hz (starting power 9VA, rating power 6VA)
	M57 = 110 V 50/60Hz (starting power 9 A, rating power 6 A)
	M58 = 230V 50/60Hz (starting power 9VA, rating power 6VA)

Weight 220 g
Minimum working pressure 2,5 bar

488.32.0.12.Ⓢ

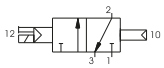

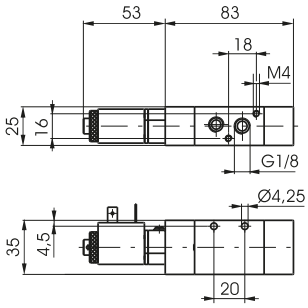

Weight 260 g
Minimum working pressure 2,5 bar

488.52.0.12.Ⓢ

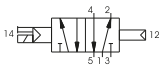

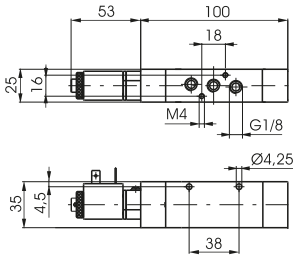

Solenoid - Solenoid

Coding: 488.Ⓣ.0.0.Ⓢ

Operational characteristics	
Fluid	Filtered air. No lubrication needed, if applied it shall be continuous
Max working pressure (bar)	10
Temperature °C	-5 ÷ +50
Flow rate at 6 bar with Δp=1 (Nl/min)	410
Orifice size (mm)	6
Working ports size	G 1/8"
Responce time according to ISO 12238, activation time (ms)	19,0 (3 ways) 18,2 (5 ways)
Responce time according to ISO 12238, deactivation time (ms)	21,1 (3 ways) 18,5 (5 ways)

Ⓣ	TYPE
	32 = 3 ways
	52 = 5 ways

Shifting time of pneumatic directional control valves or moving parts, logic devices were measured in accordance to ISO 12238:2001

Ⓢ	SOLENOID
	M11 = 24V D.C. (rating power 3,8W)
	M56 = 24V 50/60Hz (starting power 9VA, rating power 6VA)
	M57 = 110 V 50/60Hz (starting power 9 A, rating power 6 A)
	M58 = 230V 50/60Hz (starting power 9VA, rating power 6VA)

Weight 320 g
Minimum working pressure 2 bar

488.32.0.0.Ⓢ

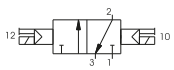

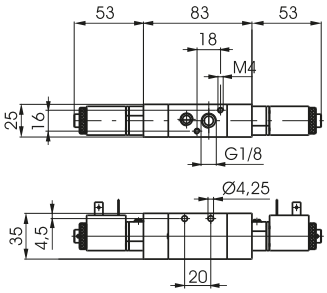

Weight 360 g
Minimum working pressure 2 bar

488.52.0.0.Ⓢ

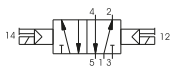

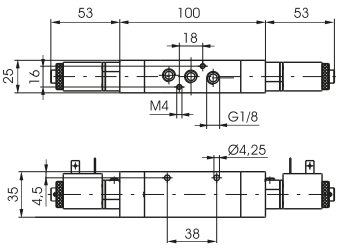

Solenoid - Solenoid 5 ways 3 connections

Coding: 488.53.Ⓕ.0.0.Ⓢ

Operational characteristics	
Fluid	Filtered air. No lubrication needed, if applied it shall be continuous
Max working pressure (bar)	10
Temperature °C	-5 ÷ +50
Flow rate at 6 bar with Δp=1 (Nl/min)	410
Orifice size (mm)	6
Working ports size	G 1/8"
Responce time according to ISO 12238, activation time (ms)	23,0 (closed centres) 21,5 (open centres) 18,9 (pressured centres)
Responce time according to ISO 12238, deactivation time (ms)	41,0 (closed centres) 38,0 (open centres) 40,2 (pressured centres)

	FUNCTION
Ⓕ	**31** = Closed centres
	32 = Open centres
	33 = Pressured centres

Shifting time of pneumatic directional control valves or moving parts, logic devices were measured in accordance to ISO 12238:2001

	SOLENOID
Ⓢ	**M11** = 24V D.C. (rating power 3,8W)
	M56 = 24V 50/60Hz (starting power 9VA, rating power 6VA)
	M57 = 110 V 50/60Hz (starting power 9 A, rating power 6 A)
	M58 = 230V 50/60Hz (starting power 9VA, rating power 6VA)

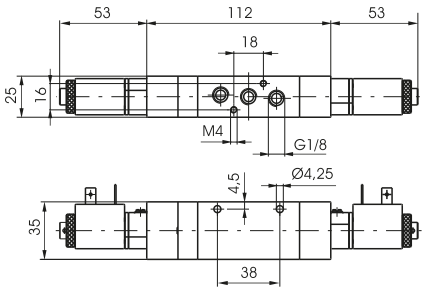

Weight 400 g
Minimum working pressure 3 bar

488.53.31.0.0.Ⓢ

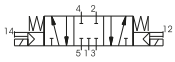

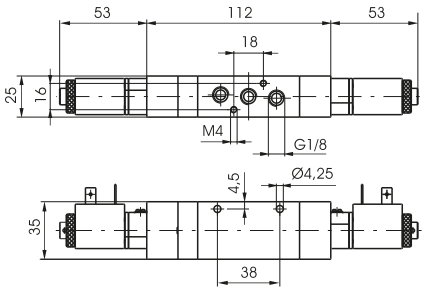

Weight 400 g
Minimum working pressure 3 bar

488.53.32.0.0.Ⓢ

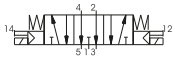

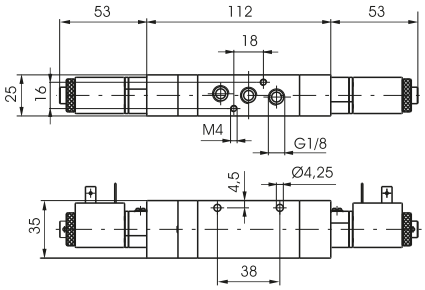

Weight 400 g
Minimum working pressure 3 bar

488.53.33.0.0.Ⓢ

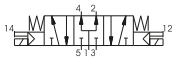

Collectors

Coding: 488.Ⓟ

	N. POSITIONS
Ⓟ	**02** = 2 positions (220 g)
	03 = 3 positions (290 g)
	04 = 4 positions (360 g)
	05 = 5 positions (430 g)
	06 = 6 positions (500 g)
	07 = 7 positions (570 g)
	08 = 8 positions (640 g)
	09 = 9 positions (710 g)
	10 = 10 positions (780 g)

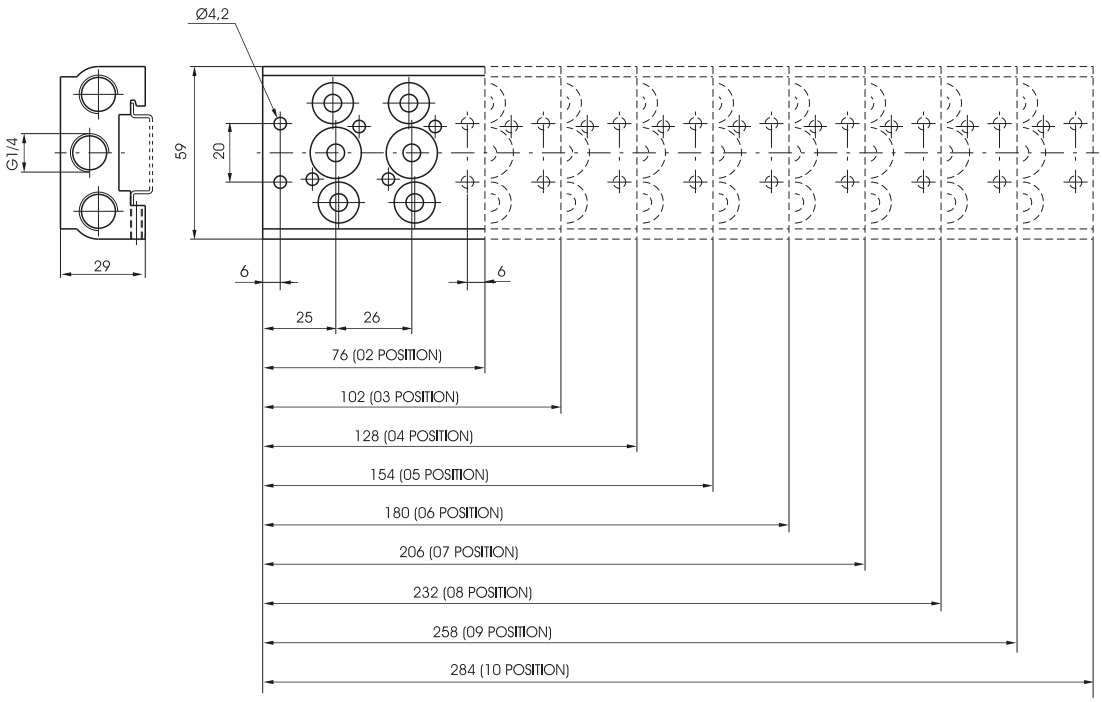

Closing plate

Coding: 488.00

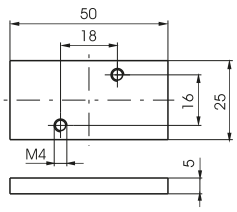

Weight 25 g

Solenoid - Spring

Coding: 464.Ⓣ.0.1.M2

Operational characteristics	
Fluid	Filtered air. No lubrication needed, if applied it shall be continuous
Max working pressure (bar)	10
Temperature °C	-5 ÷ +50
Flow rate at 6 bar with Δp=1 (Nl/min)	1360
Orifice size (mm)	8
Working ports size	G 1/4"

	TYPE
Ⓣ	**32** = 3 ways
	52 = 5 ways

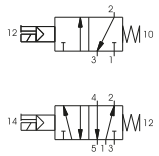

3 ways

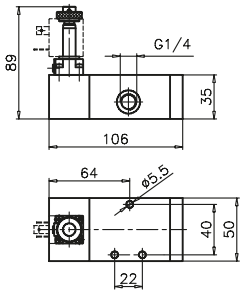

Weight 530 g
Minimum working pressure 2,5 bar

464.32.0.1.M2

5 ways

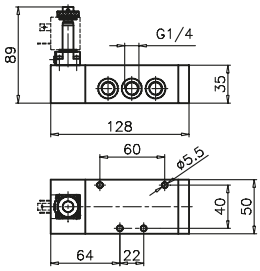

Weight 625 g
Minimum working pressure 2,5 bar

464.52.0.1.M2

Solenoid - Differential

Coding: 464.Ⓣ.0.12.M2

Operational characteristics	
Fluid	Filtered air. No lubrication needed, if applied it shall be continuous
Max working pressure (bar)	10
Temperature °C	-5 ÷ +50
Flow rate at 6 bar with Δp=1 (Nl/min)	1360
Orifice size (mm)	8
Working ports size	G 1/4"

	TYPE
Ⓣ	**32** = 3 ways
	52 = 5 ways

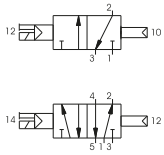

3 ways

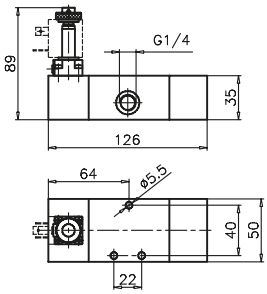

Weight 650 g
Minimum working pressure 2,5 bar

464.32.0.12.M2

5 ways

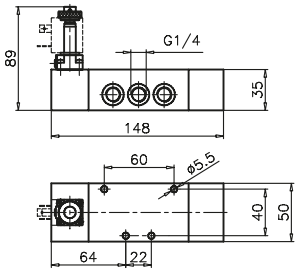

Weight 740 g
Minimum working pressure 2,5 bar

464.52.0.12.M2

Solenoid - Solenoid

Coding: 464.Ⓣ.0.0.M2

Operational characteristics	
Fluid	Filtered air. No lubrication needed, if applied it shall be continuous
Max working pressure (bar)	10
Temperature °C	-5 ÷ +50
Flow rate at 6 bar with Δp=1 (Nl/min)	1360
Orifice size (mm)	8
Working ports size	G 1/4"

	TYPE
Ⓣ	**32** = 3 ways
	52 = 5 ways

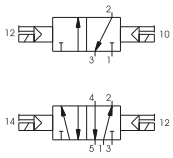

3 ways

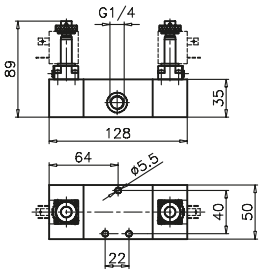

Weight 730 g
Minimum working pressure 2 bar

464.32.0.0.M2

5 ways 2 connections

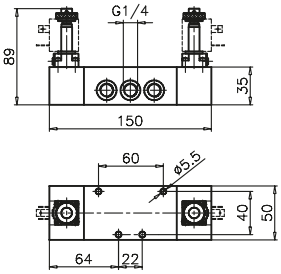

Weight 820 g
Minimum working pressure 2 bar

464.52.0.0.M2

Solenoid - Solenoid 5 ways 3 connections

Coding: 464.53.Ⓕ.0.0.M2

Operational characteristics	
Fluid	Filtered air. No lubrication needed, if applied it shall be continuous
Max working pressure (bar)	10
Temperature °C	-5 ÷ +50
Flow rate at 6 bar with Δp=1 (Nl/min)	1280
Orifice size (mm)	8
Working ports size	G 1/4"

	FUNCTION
Ⓕ	**31** = Closed centres
	32 = Open centres
	33 = Pressured centres

1

AIR DISTRIBUTION

5 ways 3 connections

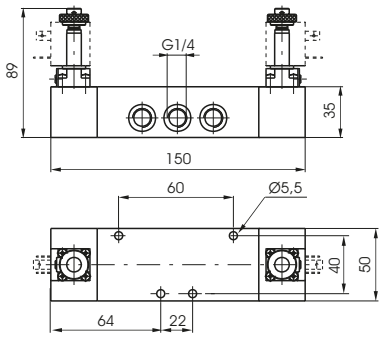

Weight 820 g
Minimum working pressure 3 bar

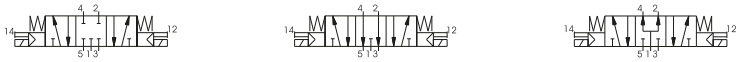

Solenoid - Spring

Coding: 464/1.Ⓣ.0.1.M2

Operational characteristics	
Fluid	Filtered air. No lubrication needed, if applied it shall be continuous
Max working pressure (bar)	10
Temperature °C	-5 ÷ +50
Flow rate at 6 bar with Δp=1 (Nl/min)	1360
Orifice size (mm)	8
Working ports size	G 1/4"

	TYPE
Ⓣ	**32** = 3 ways
	52 = 5 ways

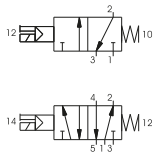

3 ways

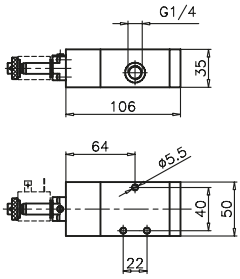

Weight 530 g
Minimum working pressure 2,5 bar

464/1.32.0.1.M2

5 ways

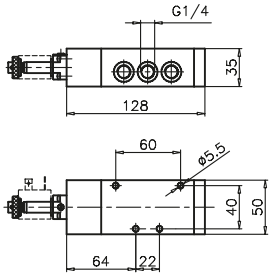

Weight 625 g
Minimum working pressure 2,5 bar

464/1.52.0.1.M2

Solenoid - Differential

Coding: 464/1.Ⓣ.0.12.M2

Operational characteristics	
Fluid	Filtered air. No lubrication needed, if applied it shall be continuous
Max working pressure (bar)	10
Temperature °C	-5 ÷ +50
Flow rate at 6 bar with Δp=1 (Nl/min)	1360
Orifice size (mm)	8
Working ports size	G 1/4"

	TYPE
Ⓣ	**32** = 3 ways
	52 = 5 ways

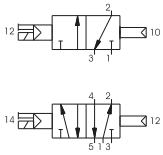

3 ways

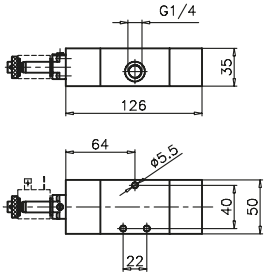

Weight 650 g
Minimum working pressure 2,5 bar

464/1.32.0.12.M2

5 ways

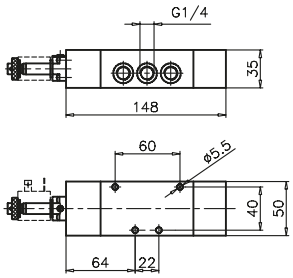

Weight 740 g
Minimum working pressure 2,5 bar

464/1.52.0.12.M2

Solenoid - Solenoid

Coding: 464/1.Ⓣ.0.0.M2

Operational characteristics	
Fluid	Filtered air. No lubrication needed, if applied it shall be continuous
Max working pressure (bar)	10
Temperature °C	-5 ÷ +50
Flow rate at 6 bar with Δp=1 (Nl/min)	1360
Orifice size (mm)	8
Working ports size	G 1/4"

	TYPE
Ⓣ	**32** = 3 ways
	52 = 5 ways

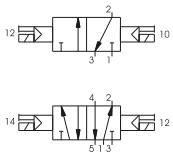

3 ways

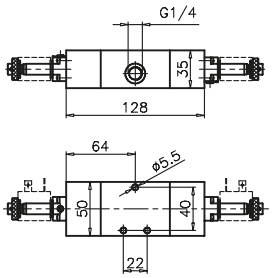

Weight 730 g
Minimum working pressure 2 bar

464/1.32.0.0.M2

5 ways 2 connections

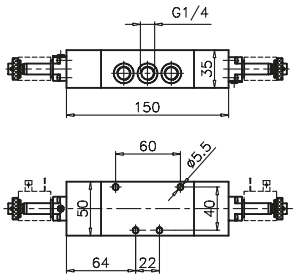

Weight 820 g
Minimum working pressure 2 bar

464/1.52.0.0.M2

Solenoid - Solenoid 5 ways 3 connections

Coding: 464/1.53.Ⓕ.0.0.M2

Operational characteristics	
Fluid	Filtered air. No lubrication needed, if applied it shall be continuous
Max working pressure (bar)	10
Temperature °C	-5 ÷ +50
Flow rate at 6 bar with Δp=1 (Nl/min)	1280
Orifice size (mm)	8
Working ports size	G 1/4"

	FUNCTION
Ⓕ	**31** = Closed centres
	32 = Open centres
	33 = Pressured centres

1

AIR DISTRIBUTION

5 ways 3 connections

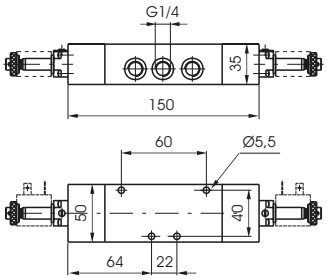

Weight 820 g
Minimum working pressure 3 bar

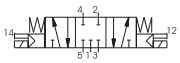

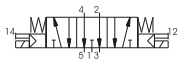

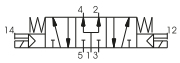

Solenoid - Spring

Coding: 452.❶.0.1.M2

	TYPE
❶	**32** = 3 ways
	52 = 5 ways

Operational characteristics	
Fluid	Filtered air. No lubrication needed, if applied it shall be continuous
Max working pressure (bar)	10
Temperature °C	-5 ÷ +50
Flow rate at 6 bar with Δp=1 (Nl/min)	3500
Orifice size (mm)	15
Working ports size	G 1/2"

Weight 1152 g
Minimum working pressure 2,5 bar

452.32.0.1.M2

Weight 1422 g
Minimum working pressure 2,5 bar

452.52.0.1.M2

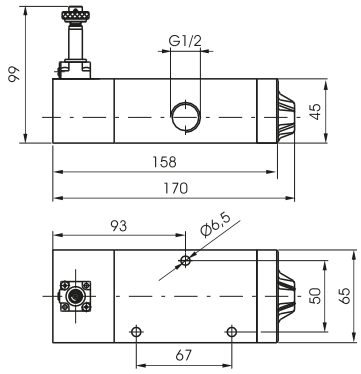

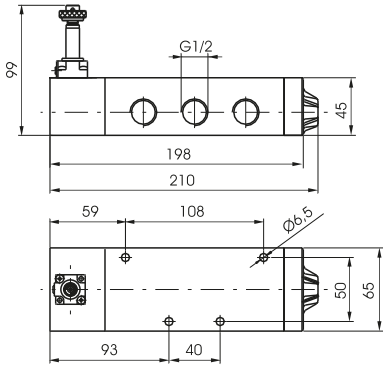

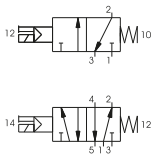

Solenoid - Differential

Coding: 452.❶.0.12.M2

	TYPE
❶	**32** = 3 ways
	52 = 5 ways

Operational characteristics	
Fluid	Filtered air. No lubrication needed, if applied it shall be continuous
Max working pressure (bar)	10
Temperature °C	-5 ÷ +50
Flow rate at 6 bar with Δp=1 (Nl/min)	3500
Orifice size (mm)	15
Working ports size	G 1/2"

Weight 1422 g
Minimum working pressure 2,5 bar

452.32.0.12.M2

Weight 1692 g
Minimum working pressure 2 bar

452.52.0.12.M2

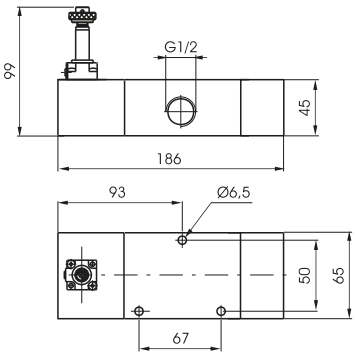

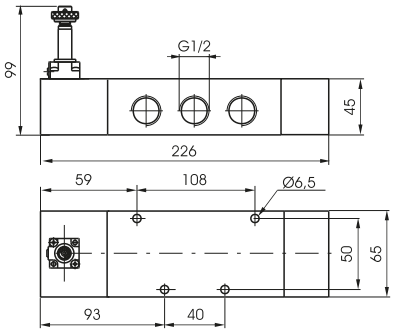

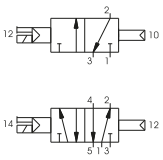

Solenoid - Solenoid

Coding: 452.Ⓣ.0.0.M2

Operational characteristics	
Fluid	Filtered air. No lubrication needed, if applied it shall be continuous
Max working pressure (bar)	10
Temperature °C	-5 ÷ +50
Flow rate at 6 bar with Δp=1 (Nl/min)	3500
Orifice size (mm)	15
Working ports size	G 1/2"

	TYPE
Ⓣ	**32** = 3 ways
	52 = 5 ways

Weight 1474 g
Minimum working pressure 2 bar

452.32.0.0.M2

Weight 1744 g
Minimum working pressure 2 bar

452.52.0.0.M2

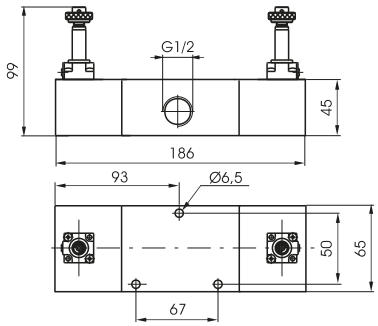

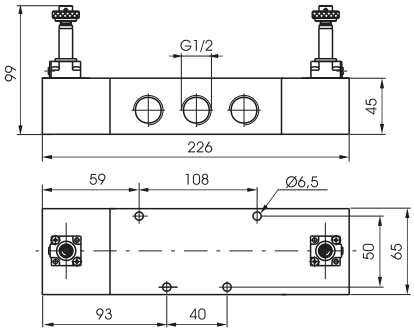

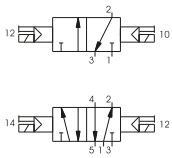

Solenoid - Solenoid 5 ways 3 connections

Coding: 452.53.Ⓕ.0.0.M2

Operational characteristics	
Fluid	Filtered air. No lubrication needed, if applied it shall be continuous
Max working pressure (bar)	10
Temperature °C	-5 ÷ +50
Flow rate at 6 bar with Δp=1 (Nl/min)	3500
Orifice size (mm)	15
Working ports size	G 1/2"

	FUNCTION
Ⓕ	**31** = Closed centres
	32 = Open centres
	33 = Pressured centres

Weight 1744 g
Minimum working pressure 3 bar

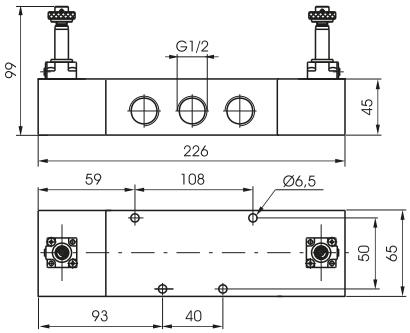

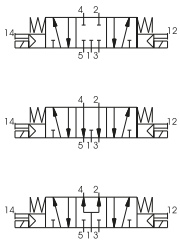

Solenoid - Spring

Coding: 452/1.Ⓣ.0.1.M2

	TYPE
Ⓣ	**32** = 3 ways
	52 = 5 ways

Operational characteristics	
Fluid	Filtered air. No lubrication needed, if applied it shall be continuous
Max working pressure (bar)	10
Temperature °C	-5 ÷ +50
Flow rate at 6 bar with Δp=1 (Nl/min)	3500
Orifice size (mm)	15
Working ports size	G 1/2"

Weight 1330 g
Minimum working pressure 2,5 bar

452/1.32.0.1.M2

Weight 1600 g
Minimum working pressure 2,5 bar

452/1.52.0.1.M2

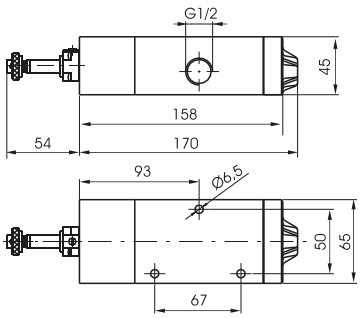

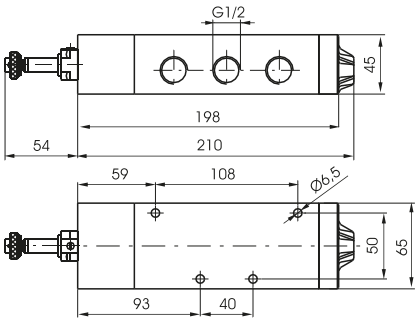

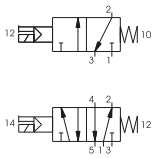

Solenoid - Differential

Coding: 452/1.Ⓣ.0.12.M2

	TYPE
Ⓣ	**32** = 3 ways
	52 = 5 ways

Operational characteristics	
Fluid	Filtered air. No lubrication needed, if applied it shall be continuous
Max working pressure (bar)	10
Temperature °C	-5 ÷ +50
Flow rate at 6 bar with Δp=1 (Nl/min)	3500
Orifice size (mm)	15
Working ports size	G 1/2"

Weight 1600 g
Minimum working pressure 2,5 bar

452/1.32.0.12.M2

Weight 1870 g
Minimum working pressure 2 bar

452/1.52.0.12.M2

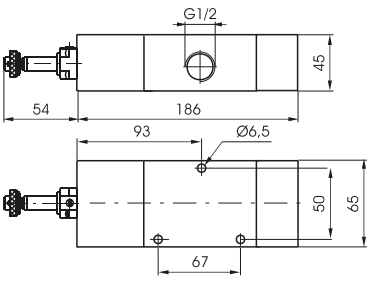

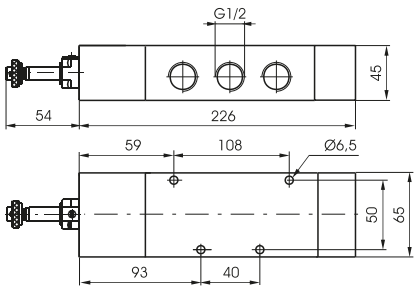

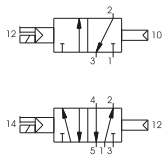

Solenoid - Solenoid

Coding: 452/1.Ⓣ.0.0.M2

	TYPE
Ⓣ	**32** = 3 ways
	52 = 5 ways

Operational characteristics	
Fluid	Filtered air. No lubrication needed, if applied it shall be continuous
Max working pressure (bar)	10
Temperature °C	-5 ÷ +50
Flow rate at 6 bar with Δp=1 (Nl/min)	3500
Orifice size (mm)	15
Working ports size	G 1/2"

Weight 1830 g
Minimum working pressure 2 bar

452/1.32.0.0.M2

Weight 2100 g
Minimum working pressure 2 bar

452/1.52.0.0.M2

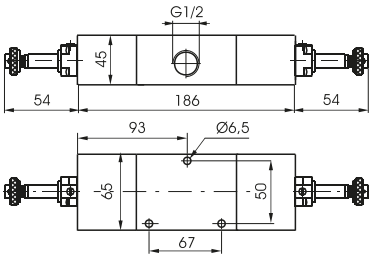

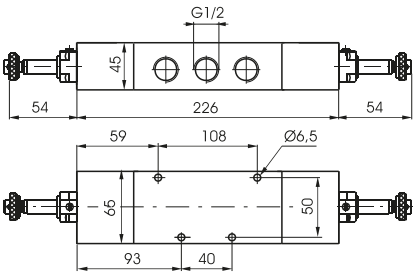

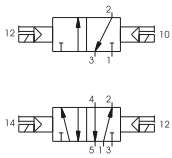

Solenoid - Solenoid 5 ways 3 connections

Coding: 452/1.53.Ⓕ.0.0.M2

	FUNCTION
Ⓕ	**31** = Closed centres
	32 = Open centres
	33 = Pressured centres

Operational characteristics	
Fluid	Filtered air. No lubrication needed, if applied it shall be continuous
Max working pressure (bar)	10
Temperature °C	-5 ÷ +50
Flow rate at 6 bar with Δp=1 (Nl/min)	3500
Orifice size (mm)	15
Working ports size	G 1/2"

Weight 2100 g
Minimum working pressure 3 bar

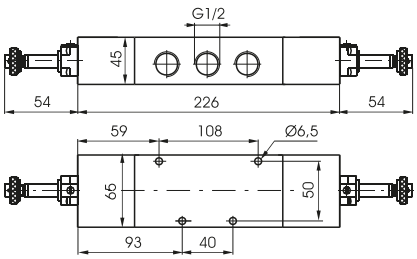

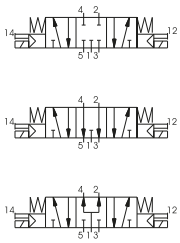

Solenoid - Spring

Coding: 412/2.Ⓣ.0.1.Ⓕ.M2

Operational characteristics	
Fluid	Filtered air. No lubrication needed, if applied it shall be continuous
Max working pressure (bar)	10
Temperature °C	-5 ÷ +50
Flow rate at 6 bar with Δp=1 (Nl/min)	3600
Orifice size (mm)	15
Working ports size	G 1/2"

Ⓣ	TYPE
	32 = 3 ways
	52 = 5 ways
Ⓕ	FUNCTION (only for 3 ways)
	C = Normally Closed
	A = Normally Open

3 ways

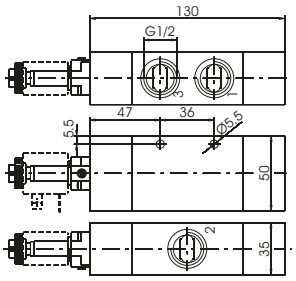

Weight 578 g
Minimum working pressure 2,5 bar

412/2.32.0.1.Ⓕ.M2

5 ways

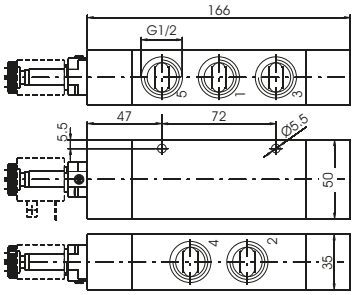

Weight 700 g
Minimum working pressure 2,5 bar

412/2.52.0.1.Ⓕ.M2

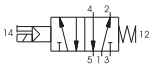

Solenoid - Differential external

Coding: 412/2.Ⓣ.0.12.Ⓕ.M2

Operational characteristics	
Fluid	Filtered air. No lubrication needed, if applied it shall be continuous
Max working pressure (bar)	10
Temperature °C	-5 ÷ +50
Flow rate at 6 bar with Δp=1 (Nl/min)	3600
Orifice size (mm)	15
Working ports size	G 1/2"

Ⓣ	TYPE
	32 = 3 ways
	52 = 5 ways
Ⓕ	FUNCTION (only for 3 ways)
	C = Normally Closed
	A = Normally Open

3 ways

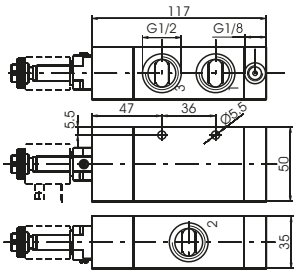

Weight 522 g
Minimum working pressure 2,5 bar

412/2.32.0.12.Ⓕ.M2

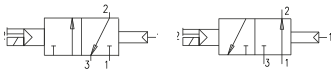

5 ways

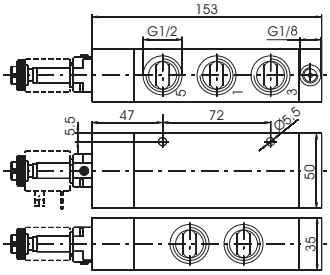

Weight 644 g
Minimum working pressure 2,5 bar

412/2.52.0.12.Ⓕ.M2

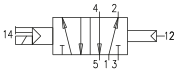

Pneumatic - Differential self aligned

Coding: 412/2.Ⓣ.0.12/1.Ⓕ.M2

Operational characteristics	
Fluid	Filtered air. No lubrication needed, if applied it shall be continuous
Max working pressure (bar)	10
Temperature °C	-5 ÷ +50
Flow rate at 6 bar with Δp=1 (Nl/min)	3600
Orifice size (mm)	15
Working ports size	G 1/2"

Ⓣ	TYPE
	32 = 3 ways
	52 = 5 ways
Ⓕ	FUNCTION (only for 3 ways)
	C = Normally Closed
	A = Normally Open

3 ways

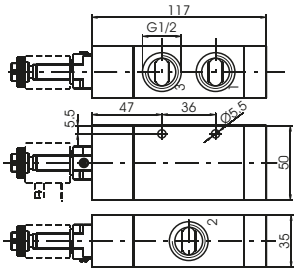

Weight 526 g
Minimum working pressure 2,5 bar

412/2.32.0.12/1.Ⓕ.M2

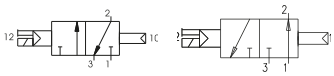

5 ways

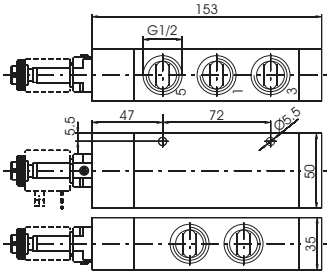

Weight 648 g
Minimum working pressure 2,5 bar

412/2.52.0.12/1.Ⓕ.M2

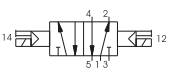

Solenoid - Solenoid

Coding: 412/2.Ⓣ.0.0.M2

Operational characteristics	
Fluid	Filtered air. No lubrication needed, if applied it shall be continuous
Max working pressure (bar)	10
Temperature °C	-5 ÷ +50
Flow rate at 6 bar with Δp=1 (Nl/min)	3600
Orifice size (mm)	15
Working ports size	G 1/2"

	TYPE
Ⓣ	**32** = 3 ways
	52 = 5 ways

3 ways

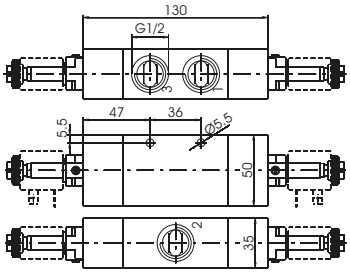

Weight 612 g
Minimum working pressure 2 bar

412/2.32.0.0.M2

5 ways 2 connections

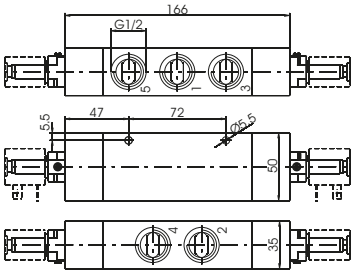

Weight 732 g
Minimum working pressure 2 bar

412/2.52.0.0.M2

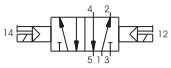

Solenoid - Solenoid 5 ways 3 connections

Coding: 412/2.53.Ⓕ.0.0.M2

Operational characteristics	
Fluid	Filtered air. No lubrication needed, if applied it shall be continuous
Max working pressure (bar)	10
Temperature °C	-5 ÷ +50
Flow rate at 6 bar with Δp=1 (Nl/min)	3300
Orifice size (mm)	15
Working ports size	G 1/2"

	FUNCTION
Ⓕ	**31** = Closed centres
	32 = Open centres
	33 = Pressured centres

5 ways 3 connections

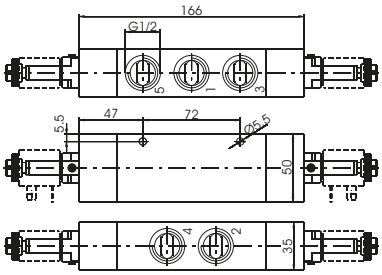

Weight 794 g
Minimum working pressure 3 bar

Solenoid - Spring

Coding: 411.Ⓣ.0.1.Ⓢ

Operational characteristics	
Fluid	Filtered air. No lubrication needed, if applied it shall be continuous
Max working pressure (bar)	10
Temperature °C	-5 ÷ +50
Flow rate at 6 bar with Δp=1 (Nl/min)	6500
Orifice size (mm)	20
Working ports size	G 1"

Ⓣ	TYPE
	32 = 3 ways
	52 = 5 ways
Ⓢ	SOLENOID
	SEE SOLENOID VALVES "S" TYPE, SERIES 300

3 ways

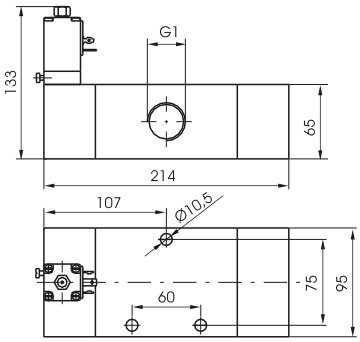

Weight 3400 g
Minimum working pressure 2,5 bar

411.32.0.1.Ⓢ

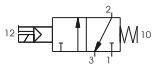

5 ways

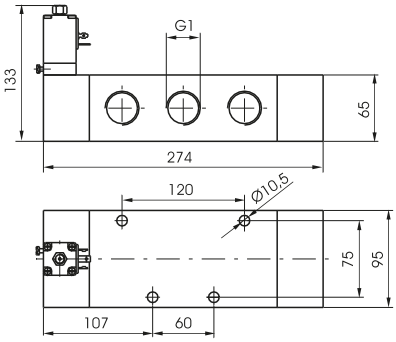

Weight 4300 g
Minimum working pressure 2,5 bar

411.52.0.1.Ⓢ

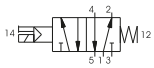

Solenoid - Differential

Coding: 411.Ⓣ.0.12.Ⓢ

Operational characteristics	
Fluid	Filtered air. No lubrication needed, if applied it shall be continuous
Max working pressure (bar)	10
Temperature °C	-5 ÷ +50
Flow rate at 6 bar with Δp=1 (Nl/min)	6500
Orifice size (mm)	20
Working ports size	G 1"

Ⓣ	TYPE
	32 = 3 ways
	52 = 5 ways
Ⓢ	SOLENOID
	SEE SOLENOID VALVES "S" TYPE, SERIES 300

3 ways

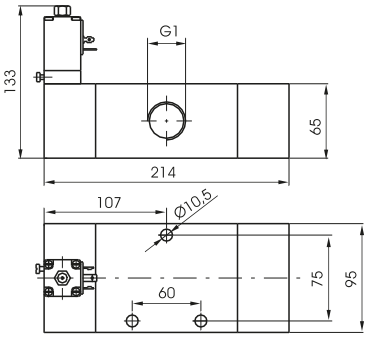

Weight 3400 g
Minimum working pressure 2,5 bar

411.32.0.12.Ⓢ

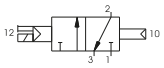

5 ways

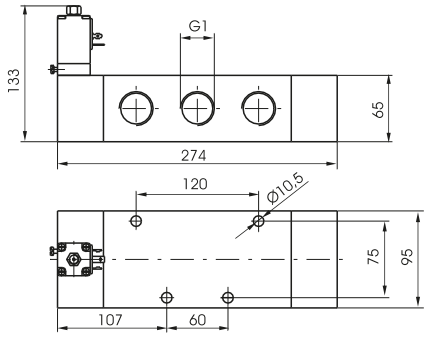

Weight 4300 g
Minimum working pressure 2,5 bar

411.52.0.12.Ⓢ

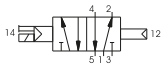

Solenoid - Solenoid

Coding: 411.Ⓣ.0.0.Ⓢ

Operational characteristics	
Fluid	Filtered air. No lubrication needed, if applied it shall be continuous
Max working pressure (bar)	10
Temperature °C	-5 ÷ +50
Flow rate at 6 bar with Δp=1 (Nl/min)	6500
Orifice size (mm)	20
Working ports size	G 1"

Ⓣ	TYPE
	32 = 3 ways
	52 = 5 ways
Ⓢ	SOLENOID
	SEE SOLENOID VALVES "S" TYPE, SERIES 300

3 ways

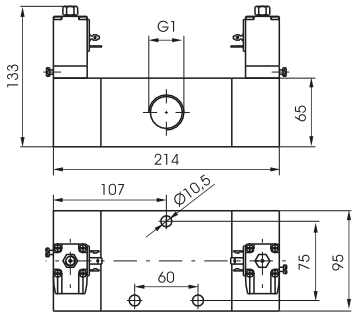

Weight 3700 g
Minimum working pressure 2 bar

411.32.0.0.Ⓢ

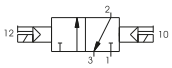

5 ways 2 connections

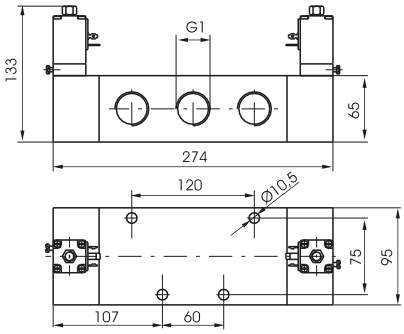

Weight 4600 g
Minimum working pressure 2 bar

411.52.0.0.Ⓢ

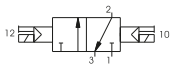

Solenoid - Solenoid 5 ways 3 connections

Coding: 411.53.Ⓕ.0.0.Ⓢ

Operational characteristics	
Fluid	Filtered air. No lubrication needed, if applied it shall be continuous
Max working pressure (bar)	10
Temperature °C	-5 ÷ +50
Flow rate at 6 bar with Δp=1 (Nl/min)	6500
Orifice size (mm)	20
Working ports size	G 1"

Ⓕ	FUNCTION
	31 = Closed centres
	32 = Open centres
	33 = Pressured centres
Ⓢ	SOLENOID
	SEE SOLENOID VALVES "S" TYPE, SERIES 300

5 ways 3 connections

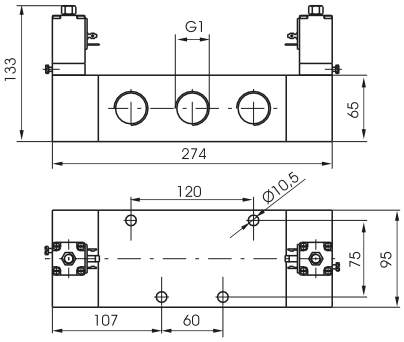

Weight 4700 g
Minimum working pressure 3 bar

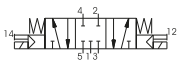

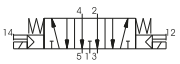

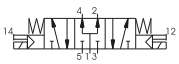

Series T400

General

The Series **T400** involves a wide range of valves and solenoid valves, with several type of acting, with connections from **G1/8" (T488)** and **G1/4" (T424)**, are manufactured with high performance technopolimer.
The use of technopolymer has resulted in a light weight product which can be offered to the market at very interesting prices.
The gang mounted solenoid valves are available with the traditional manifold obtained from bored square bar of series 600 and with the extruded aluminium base allowing a unic inlet port conveying the exhausts. The base is also prearranged to be fixed on DIN 46277/3 guide.

The Valves and Solenoid valves **G1/8" (T488)** are: 5 ways function, pneumatically operated, single solenoid (monostable) mechanical or pneumatic spring return, spring or pneumatic return, with 2 coils (bistable) and in 5 ways 3 positions version with closed, open and pressured centres.
The solenoid valves are supplied complete with coil (see Series 300) so that the tension has to be added to the solenoid valve code:
M9 = Coil 24 V D.C. (rating power 2 watt)
M11 = Coil 24 V D.C. (rating power 3.8 watt)
M56 = Coil 24 V 50/60 HZ (starting power 9 VA, rating power 6 VA)
M57 = Coil 110 V 50/60 HZ (starting power 9 VA, rating power 6 VA)
M58 = Coil 220 V 50/60 HZ (starting power 9 VA, rating power 6 VA)

The Solenoid valves series **G1/4" (T424)**, are manufactured, depending on version and actuation (manual, pneumatic, or electrical), and self aligning (pneumatic - electric or spring) 3/2, 5/2 and 5/3 ways function, (monostable), (bistable).
The solenoid valves are supplied complete with coil so that the tension has to be added to the solenoid valve code.
B04 = coil 12V D.C.
B05 = coil 24V D.C.
B09 = coil 24V (2W) D.C.
B56 = coil 24V 50/60 Hz A.C.
B57 = coil 110V 50/60 Hz A.C.
B58 = coil 220V 50/60 Hz A.C.

Construction characteristics

Body	Technopolymer
Spacer	Technopolymer
Spacers	NBR
Piston seals	NBR
Springs	AISI 302 stainless steel
Operators	Technopolymer
Pistons	Technopolymer
Spools	Nickel - plated steel / Technopolymer

Maximum fitting torque

Thread	Maximum torque (Nm)
G 1/8"	4
G1/4"	9

Use and maintenance

This valves have an average life of 15 million cycles depending on the application and air quality.
Filtered and lubricated air using specified lubricants will reduce the wear of the seals and ensures long and trouble free operation.
Please ensure that the valve is being used according with the manufacturers specification, such as air pressure and temperature.
The exhaust port of the distributor has to be protected in a dusty and dirty environment.
Repair kits including the spool complete with seals are available for overhauling the valves.
However, although this is a simple operation it should be carried out by a competent person.

ATTENTION: use hydraulic oil class H for lubrication such as MAGNA GC 32 (Castrol).

Pneumatic - Spring

Coding: T488.Ⓣ.11.1

Operational characteristics	
Fluid	Filtered air. No lubrication needed, if applied it shall be continuous
Max working pressure (bar)	10
Temperature °C	-5 ÷ +50
Flow rate at 6 bar with Δp=1 (Nl/min)	620
Orifice size (mm)	6
Working ports size	G 1/8"

	TYPE
Ⓣ	**32** = 3 ways
	52 = 5 ways

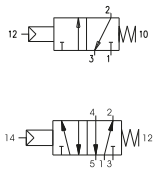

3 ways

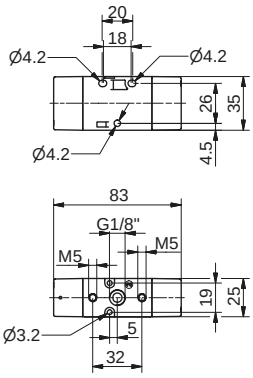

Weight 75 g
Minimum working pressure 2,5 bar

T488.32.11.1

5 ways

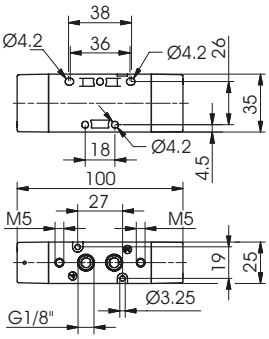

Weight 75 g
Minimum working pressure 2,5 bar

T488.52.11.1

Pneumatic - Differential (External)

Coding: T488.Ⓣ.11.12

Operational characteristics	
Fluid	Filtered air. No lubrication needed, if applied it shall be continuous
Max working pressure (bar)	10
Temperature °C	-5 ÷ +50
Flow rate at 6 bar with Δp=1 (Nl/min)	620
Orifice size (mm)	6
Working ports size	G 1/8"

	TYPE
Ⓣ	**32** = 3 ways
	52 = 5 ways

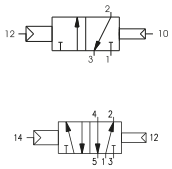

3 ways

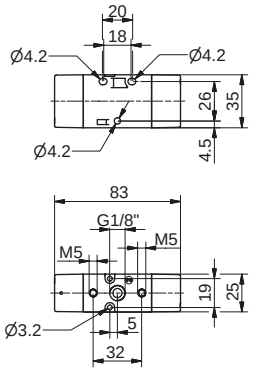

T488.32.11.12

5 ways

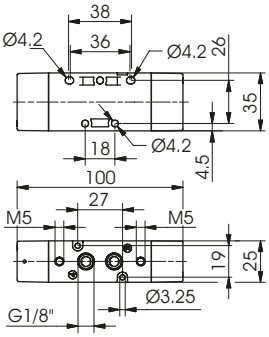

T488.52.11.12

Pneumatic - Pneumatic

Coding: T488.Ⓣ.11.11

Operational characteristics	
Fluid	Filtered air. No lubrication needed, if applied it shall be continuous
Max working pressure (bar)	10
Temperature °C	-5 ÷ +50
Flow rate at 6 bar with Δp=1 (Nl/min)	620
Orifice size (mm)	6
Working ports size	G 1/8"

	TYPE
Ⓣ	**32** = 3 ways
	52 = 5 ways

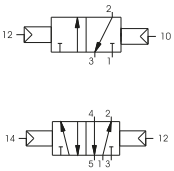

3 ways

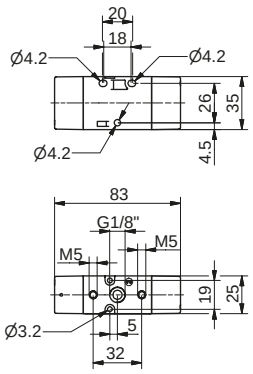

Minimum working pressure 2 bar (for Pneumatic-Pneumatic version)

T488.32.11.11

5 ways

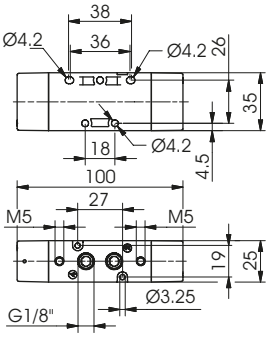

Minimum working pressure 2 bar (for Pneumatic-Pneumatic version)

T488.52.11.11

Pneumatic - Pneumatic 5 ways 3 connections

Coding: T488.53.Ⓕ.11.11

Operational characteristics	
Fluid	Filtered air. No lubrication needed, if applied it shall be continuous
Max working pressure (bar)	10
Temperature °C	-5 ÷ +50
Flow rate at 6 bar with Δp=1 (Nl/min)	410
Orifice size (mm)	6
Working ports size	G 1/8"

Ⓕ	FUNCTION
	31 = Closed centres
	32 = Open centres
	33 = Pressured centres

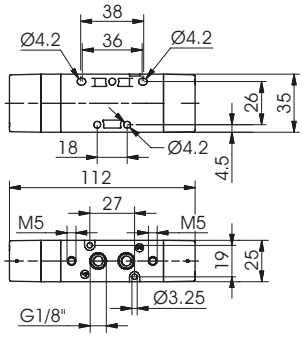

Weight 140 g
Minimum working pressure 3 bar (for Pneumatic-Pneumatic version)

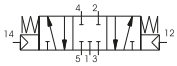

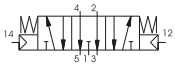

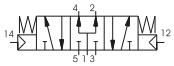

Solenoid - Spring (Self-feeding)

Coding: T488.Ⓣ.0.1.Ⓥ

Ⓣ	TYPE
	32 = 3 ways
	52 = 5 ways
Ⓥ	VOLTAGE
	M9 = Solenoid - Spring (Self-feeding)
	M11 = 24V D.C. (rating power 3,8W)
	M56 = 24V 50/60Hz (starting power 9VA, rating power 6VA)
	M57 = 110 V 50/60Hz (starting power 9VA, rating power 6VA)
	M58 = 230V 50/60Hz (starting power 9VA, rating power 6VA)

Operational characteristics	
Fluid	Filtered air. No lubrication needed, if applied it shall be continuous
Max working pressure (bar)	10
Temperature °C	-5 ÷ +50
Flow rate at 6 bar with Δp=1 (Nl/min)	620
Orifice size (mm)	6
Working ports size	G 1/8"
Responce time according to ISO 12238, activation time (ms)	23,4 (3 ways) 22,8 (5 ways)
Responce time according to ISO 12238, deactivation time (ms)	41,0 (3 ways) 44,5 (5 ways)

Shifting time of pneumatic directional control valves or moving parts, logic devices were measured in accordance to ISO 12238:2001

Weight 160 g
Minimum working pressure 2,5 bar

Weight 190 g
Minimum working pressure 2,5 bar

T488.32.0.1.Ⓥ

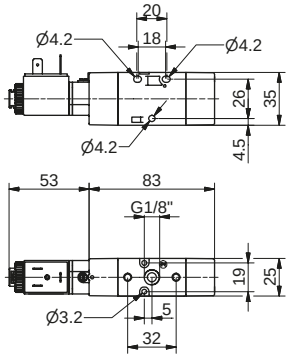

T488.52.0.1.Ⓥ

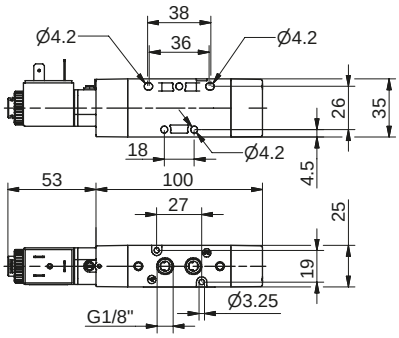

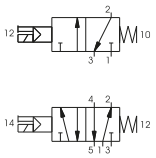

Solenoid - Spring (External-feeding)

Coding: T488.Ⓣ.0.1E.Ⓥ

Ⓣ	TYPE
	32 = 3 ways
	52 = 5 ways
Ⓥ	VOLTAGE
	M9 = Solenoid - Spring (Self-feeding)
	M11 = 24V D.C. (rating power 3,8W)
	M56 = 24V 50/60Hz (starting power 9VA, rating power 6VA)
	M57 = 110 V 50/60Hz (starting power 9VA, rating power 6VA)
	M58 = 230V 50/60Hz (starting power 9VA, rating power 6VA)

Operational characteristics	
Fluid	Filtered air. No lubrication needed, if applied it shall be continuous
Max working pressure (bar)	10
Temperature °C	-5 ÷ +50
Flow rate at 6 bar with Δp=1 (Nl/min)	620
Orifice size (mm)	6
Working ports size	G 1/8"
Responce time according to ISO 12238, activation time (ms)	23,4 (3 ways) 22,8 (5 ways)
Responce time according to ISO 12238, deactivation time (ms)	41,0 (3 ways) 44,5 (5 ways)

Shifting time of pneumatic directional control valves or moving parts, logic devices were measured in accordance to ISO 12238:2001

Weight 160 g
Minimum working pressure 2,5 bar

Weight 190 g
Minimum working pressure 2,5 bar

T488.32.0.1E.Ⓥ

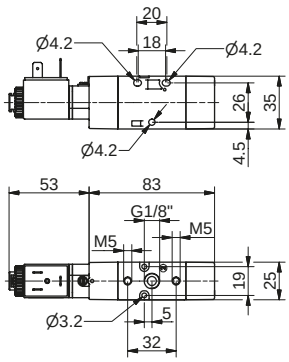

T488.52.0.1E.Ⓥ

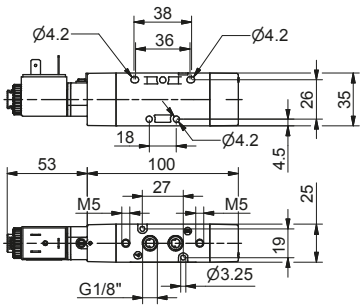

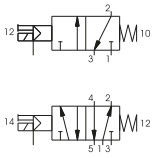

Solenoid - Differential (Self-feeding)

Coding: T488.Ⓣ.0.12.Ⓥ

Ⓣ	TYPE
	32 = 3 ways
	52 = 5 ways
Ⓥ	VOLTAGE
	M9 = Solenoid - Spring (Self-feeding)
	M11 = 24V D.C. (rating power 3,8W)
	M56 = 24V 50/60Hz (starting power 9VA, rating power 6VA)
	M57 = 110 V 50/60Hz (starting power 9VA, rating power 6VA)
	M58 = 230V 50/60Hz (starting power 9VA, rating power 6VA)

Operational characteristics	
Fluid	Filtered air. No lubrication needed, if applied it shall be continuous
Max working pressure (bar)	10
Temperature °C	-5 ÷ +50
Flow rate at 6 bar with Δp=1 (Nl/min)	620
Orifice size (mm)	6
Working ports size	G 1/8"
Responce time according to ISO 12238, activation time (ms)	31,1 (3 ways) 27,9 (5 ways)
Responce time according to ISO 12238, deactivation time (ms)	35,0 (3 ways) 34,5 (5 ways)

Shifting time of pneumatic directional control valves or moving parts, logic devices were measured in accordance to ISO 12238:2001

Weight 160 g
Minimum working pressure 2,5 bar

Weight 190 g
Minimum working pressure 2,5 bar

T488.32.0.12.Ⓥ

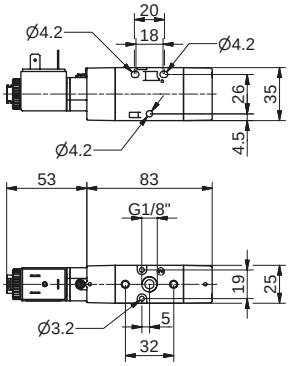

T488.52.0.12.Ⓥ

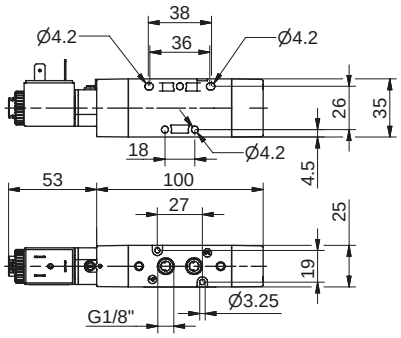

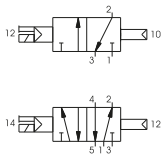

Solenoid - Differential (External-feeding)

Coding: T488.Ⓣ.0.12E.Ⓥ

Ⓣ	TYPE
	32 = 3 ways
	52 = 5 ways
Ⓥ	VOLTAGE
	M9 = Solenoid - Spring (Self-feeding)
	M11 = 24V D.C. (rating power 3,8W)
	M56 = 24V 50/60Hz (starting power 9VA, rating power 6VA)
	M57 = 110 V 50/60Hz (starting power 9VA, rating power 6VA)
	M58 = 230V 50/60Hz (starting power 9VA, rating power 6VA)

Operational characteristics	
Fluid	Filtered air. No lubrication needed, if applied it shall be continuous
Max working pressure (bar)	10
Temperature °C	-5 ÷ +50
Flow rate at 6 bar with Δp=1 (Nl/min)	620
Orifice size (mm)	6
Working ports size	G 1/8"
Responce time according to ISO 12238, activation time (ms)	31,1 (3 ways) 27,9 (5 ways)
Responce time according to ISO 12238, deactivation time (ms)	35,0 (3 ways) 34,5 (5 ways)

Shifting time of pneumatic directional control valves or moving parts, logic devices were measured in accordance to ISO 12238:2001

Weight 160 g
Minimum working pressure 2,5 bar

Weight 190 g
Minimum working pressure 2,5 bar

T488.32.0.12E.Ⓥ

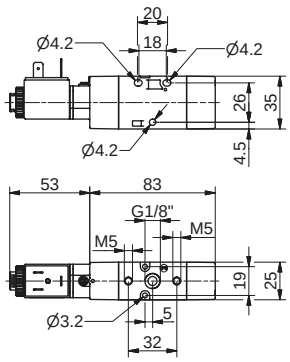

T488.52.0.12E.Ⓥ

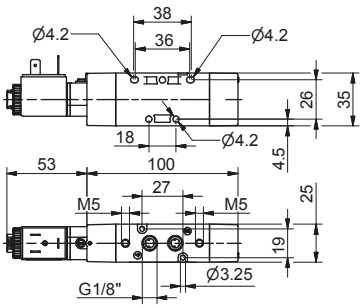

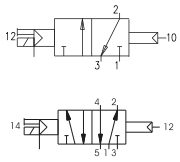

Solenoid - Solenoid (Self-feeding)

Coding: T488.Ⓣ.0.0.Ⓥ

Ⓣ	TYPE
	32 = 3 ways
	52 = 5 ways
Ⓥ	VOLTAGE
	M9 = Solenoid - Spring (Self-feeding)
	M11 = 24V D.C. (rating power 3,8W)
	M56 = 24V 50/60Hz (starting power 9VA, rating power 6VA)
	M57 = 110 V 50/60Hz (starting power 9VA, rating power 6VA)
	M58 = 230V 50/60Hz (starting power 9VA, rating power 6VA)

Operational characteristics	
Fluid	Filtered air. No lubrication needed, if applied it shall be continuous
Max working pressure (bar)	10
Temperature °C	-5 ÷ +50
Flow rate at 6 bar with Δp=1 (Nl/min)	620
Orifice size (mm)	6
Working ports size	G 1/8"
Responce time according to ISO 12238, activation time (ms)	18,8 (3 ways) 18,0 (5 ways)
Responce time according to ISO 12238, deactivation time (ms)	18,0 (3 ways) 19,1 (5 ways)

Shifting time of pneumatic directional control valves or moving parts, logic devices were measured in accordance to ISO 12238:2001

Weight 250 g
Minimum working pressure 2 bar

Weight 290 g
Minimum working pressure 2 bar

T488.32.0.0.Ⓥ

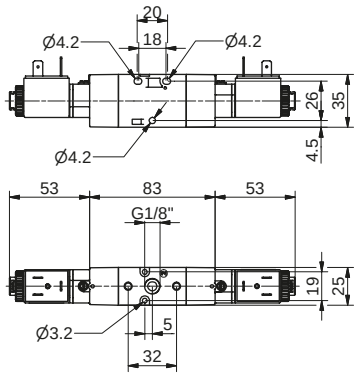

T488.52.0.0.Ⓥ

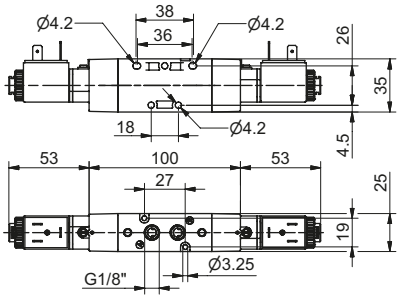

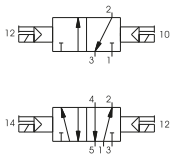

Solenoid - Solenoid (External-feeding)

Coding: T488.Ⓣ.0.0E.Ⓥ

Ⓣ	TYPE
	32 = 3 ways
	52 = 5 ways
Ⓥ	VOLTAGE
	M9 = Solenoid - Spring (Self-feeding)
	M11 = 24V D.C. (rating power 3,8W)
	M56 = 24V 50/60Hz (starting power 9VA, rating power 6VA)
	M57 = 110 V 50/60Hz (starting power 9VA, rating power 6VA)
	M58 = 230V 50/60Hz (starting power 9VA, rating power 6VA)

Operational characteristics	
Fluid	Filtered air. No lubrication needed, if applied it shall be continuous
Max working pressure (bar)	10
Temperature °C	-5 ÷ +50
Flow rate at 6 bar with Δp=1 (Nl/min)	620
Orifice size (mm)	6
Working ports size	G 1/8"
Responce time according to ISO 12238, activation time (ms)	18,8 (3 ways) 18,0 (5 ways)
Responce time according to ISO 12238, deactivation time (ms)	18,0 (3 ways) 19,1 (5 ways)

Shifting time of pneumatic directional control valves or moving parts, logic devices were measured in accordance to ISO 12238:2001

Weight 250 g
Minimum working pressure 2 bar

Weight 290 g
Minimum working pressure 2 bar

T488.32.0.0E.Ⓥ

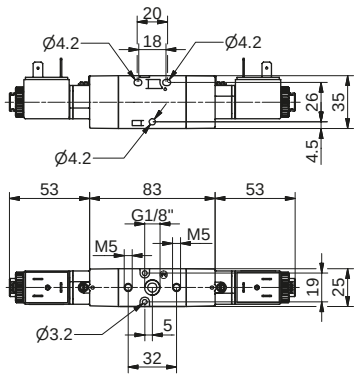

T488.52.0.0E.Ⓥ