Solenoid - Solenoid 5 ways 3 connections (Self-feeding)

Coding: T488.53.Ⓕ.0.0.Ⓥ

Operational characteristics	
Fluid	Filtered air. No lubrication needed, if applied it shall be continuous
Max working pressure (bar)	10
Temperature °C	-5 ÷ +50
Flow rate at 6 bar with Δp=1 (Nl/min)	410
Orifice size (mm)	6
Working ports size	G 1/8"
Responce time according to ISO 12238, activation time (ms)	21,3 (closed centres) 21,5 (open centres) 19,5 (pressured centres)
Responce time according to ISO 12238, deactivation time (ms)	37,0 (closed centres) 34,5 (open centres) 37,3 (pressured centres)

Shifting time of pneumatic directional control valves or moving parts, logic devices were measured in accordance to ISO 12238:2001

Ⓕ	FUNCTION
	31 = Closed centres
	32 = Open centres
	33 = Pressured centres
Ⓥ	VOLTAGE
	M9 = Solenoid - Spring (Self-feeding)
	M11 = 24V D.C. (rating power 3,8W)
	M56 = 24V 50/60Hz (starting power 9VA, rating power 6VA)
	M57 = 110 V 50/60Hz (starting power 9VA, rating power 6VA)
	M58 = 230V 50/60Hz (starting power 9VA, rating power 6VA)

Minimum working pressure 3 bar
Weight 330 g

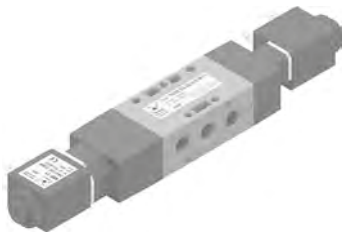

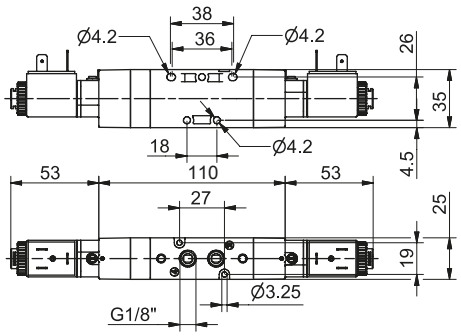

T488.53.31.0.0.Ⓥ

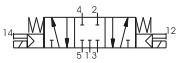

T488.53.32.0.0.Ⓥ

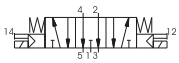

T488.53.33.0.0.Ⓥ

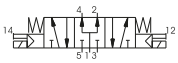

Solenoid - Solenoid 5/3 (External-feeding)

Coding: T488.53.Ⓕ.0E.Ⓥ

Operational characteristics	
Fluid	Filtered air. No lubrication needed, if applied it shall be continuous
Max working pressure (bar)	10
Temperature °C	-5 ÷ +50
Flow rate at 6 bar with Δp=1 (Nl/min)	410
Orifice size (mm)	6
Working ports size	G 1/8"
Responce time according to ISO 12238, activation time (ms)	21,3 (closed centres) 21,5 (open centres) 19,5 (pressured centres)
Responce time according to ISO 12238, deactivation time (ms)	37,0 (closed centres) 34,5 (open centres) 37,3 (pressured centres)

Shifting time of pneumatic directional control valves or moving parts, logic devices were measured in accordance to ISO 12238:2001

Ⓕ	FUNCTION
	31 = Closed centres
	32 = Open centres
	33 = Pressured centres
Ⓥ	VOLTAGE
	M9 = Solenoid - Spring (Self-feeding)
	M11 = 24V D.C. (rating power 3,8W)
	M56 = 24V 50/60Hz (starting power 9VA, rating power 6VA)
	M57 = 110 V 50/60Hz (starting power 9VA, rating power 6VA)
	M58 = 230V 50/60Hz (starting power 9VA, rating power 6VA)

Minimum working pressure 3 bar
Weight 330 g

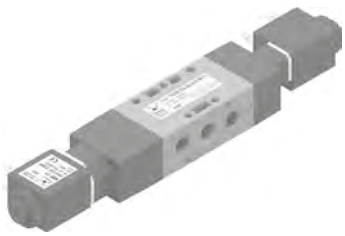

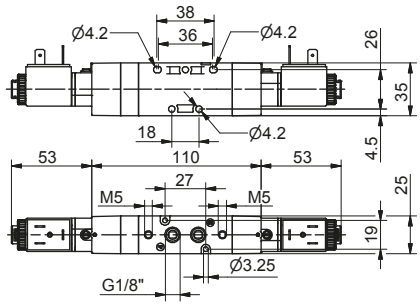

T488.53.31.0.0E.Ⓥ

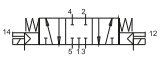

T488.53.32.0.0E.Ⓥ

T488.53.33.0.0E.Ⓥ

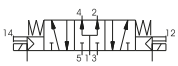

Collectors

Coding: T488.Ⓟ

	N. POSITIONS
Ⓟ	**02** = 2 positions (220 g)
	03 = 3 positions (290 g)
	04 = 4 positions (360 g)
	05 = 5 positions (430 g)
	06 = 6 positions (500 g)
	07 = 7 positions (570 g)
	08 = 8 positions (640 g)
	09 = 9 positions (710 g)
	10 = 10 positions (780 g)

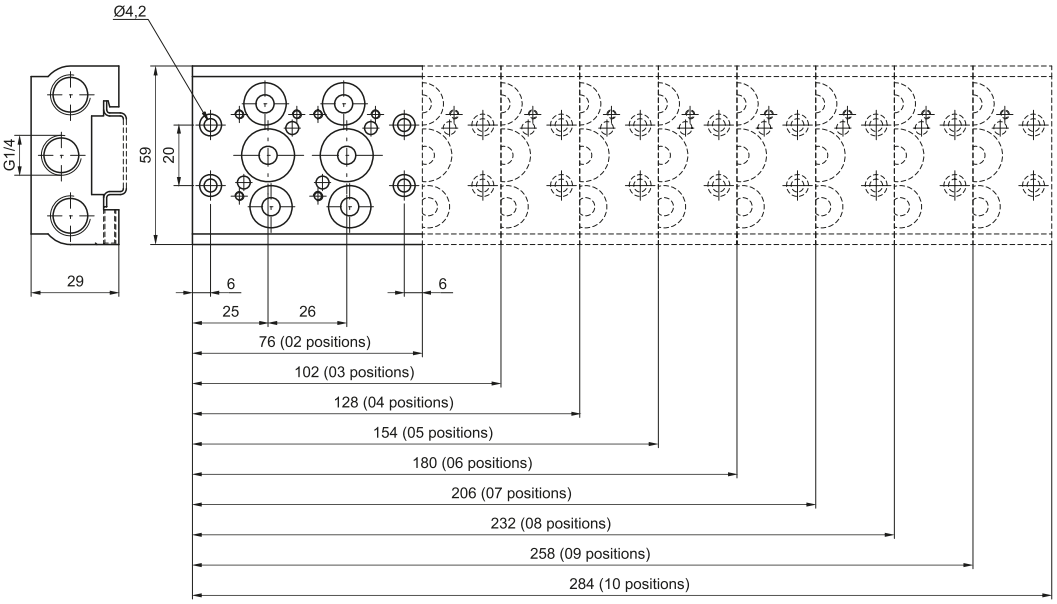

Modular base

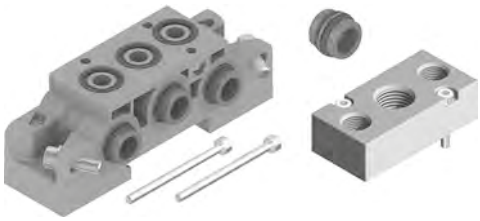

Coding: T488.Ⓣ

	TYPE
Ⓣ	**01** = Single complete base
	01K = Complete modular bases (batches of 20 pieces)
	30K = Hollow bush, complete with O-rings (Nr. 50 pieces)
	31K = Blank bush, complete with O-rings (Nr. 50 pieces)
	32K = Intermediate air intake with screw (Nr. 5 pieces)
	33 = Screw to suite solenoid valves (Nr. 50 pieces)
	34 = Screw for joning bases (Nr. 50 pieces)
	35 = Washer for screw for joning bases (Nr. 50 pieces)
	36 = OR (50 pz)

Closing plate

Coding: T488.00

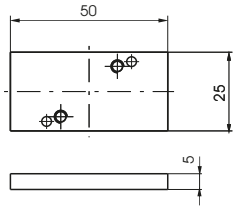

weight 25

Solenoid - Spring (Self-feeding)

Coding: T424.Ⓣ.0.1.Ⓥ

Operational characteristics	
Fluid	Filtered air. No lubrication needed, if applied it shall be continuous
Max working pressure (bar)	10
Temperature °C	-5 ÷ +50
Flow rate at 6 bar with Δp=1 (Nl/min)	1050
Orifice size (mm)	8.5
Working ports size	G 1/4"

Ⓣ	TYPE	
	32 =	3 ways
	52 =	5 ways
Ⓥ	VOLTAGE	
	B04 =	12 V DC
	B05 =	24 V DC
	B09 =	24 V DC (2 W)
	B56 =	24 V 50-60 Hz
	B57 =	110 V 50-60 Hz
	B58 =	230 V 50-60 Hz

Weight 205 g
Minimum piloting pressure 2,5 bar

Weight 235 g
Minimum piloting pressure 2,5 bar

T424.32.0.1.Ⓥ

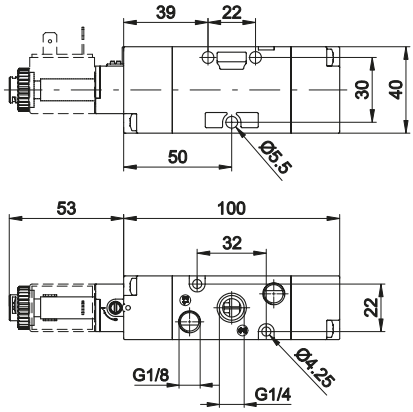

T424.52.0.1.Ⓥ

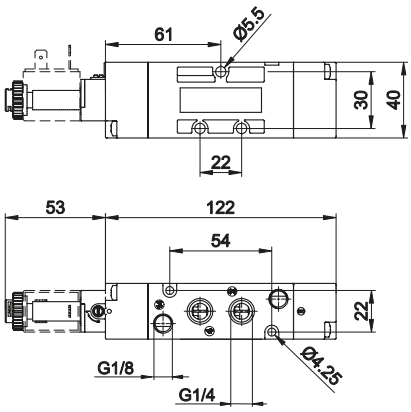

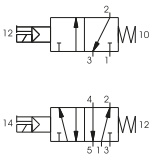

Solenoid - Spring (External-feeding)

Coding: T424.Ⓣ.0.1.E.Ⓥ

Operational characteristics	
Fluid	Filtered air. No lubrication needed, if applied it shall be continuous
Max working pressure (bar)	10
Temperature °C	-5 ÷ +50
Flow rate at 6 bar with Δp=1 (Nl/min)	1050
Orifice size (mm)	8.5
Working ports size	G 1/4"
Pilot ports size	G 1/8"

Ⓣ	TYPE	
	32 =	3 ways
	52 =	5 ways
Ⓥ	VOLTAGE	
	B04 =	12 V DC
	B05 =	24 V DC
	B09 =	24 V DC (2 W)
	B56 =	24 V 50-60 Hz
	B57 =	110 V 50-60 Hz
	B58 =	230 V 50-60 Hz

Weight 205 g
Minimum piloting pressure 2,5 bar

Weight 235 g
Minimum piloting pressure 2,5 bar

T424.32.0.1.E.Ⓥ

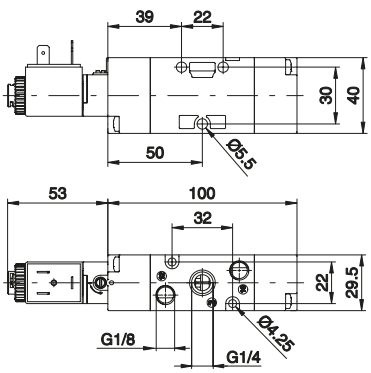

T424.52.0.1.E.Ⓥ

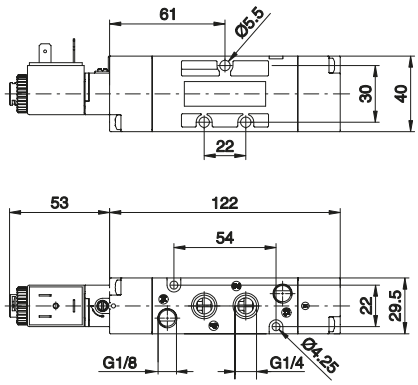

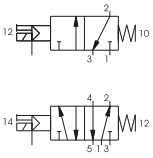

Solenoid - Differential (Self-feeding)

Coding: T424.Ⓣ.0.12.Ⓥ

Operational characteristics	
Fluid	Filtered air. No lubrication needed, if applied it shall be continuous
Max working pressure (bar)	10
Temperature °C	-5 ÷ +50
Flow rate at 6 bar with Δp=1 (Nl/min)	1050
Orifice size (mm)	8.5
Working ports size	G 1/4"

Ⓣ	TYPE	
	32 =	3 ways
	52 =	5 ways
Ⓥ	VOLTAGE	
	B04 =	12 V DC
	B05 =	24 V DC
	B09 =	24 V DC (2 W)
	B56 =	24 V 50-60 Hz
	B57 =	110 V 50-60 Hz
	B58 =	230 V 50-60 Hz

Weight 205 g
Minimum piloting pressure 2 bar

T424.32.0.12.Ⓥ

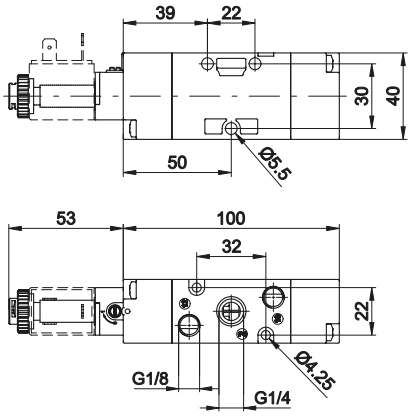

Weight 235 g
Minimum piloting pressure 2 bar

T424.52.0.12.Ⓥ

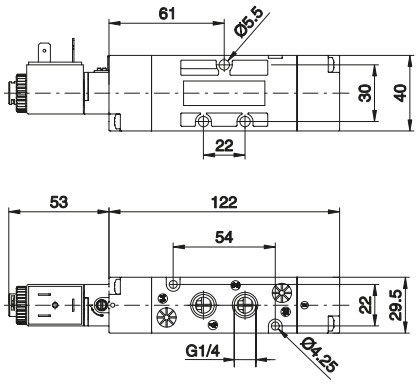

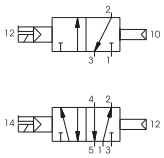

Solenoid - Differential (External-feeding)

Coding: T424.Ⓣ.0.12.E.Ⓥ

Operational characteristics	
Fluid	Filtered air. No lubrication needed, if applied it shall be continuous
Max working pressure (bar)	10
Temperature °C	-5 ÷ +50
Flow rate at 6 bar with Δp=1 (Nl/min)	1050
Orifice size (mm)	8.5
Working ports size	G 1/4"
Pilot ports size	G 1/8"

Ⓣ	TYPE	
	32 =	3 ways
	52 =	5 ways
Ⓥ	VOLTAGE	
	B04 =	12 V DC
	B05 =	24 V DC
	B09 =	24 V DC (2 W)
	B56 =	24 V 50-60 Hz
	B57 =	110 V 50-60 Hz
	B58 =	230 V 50-60 Hz

Weight 205 g
Minimum piloting pressure 2 bar

T424.32.0.12.E.Ⓥ

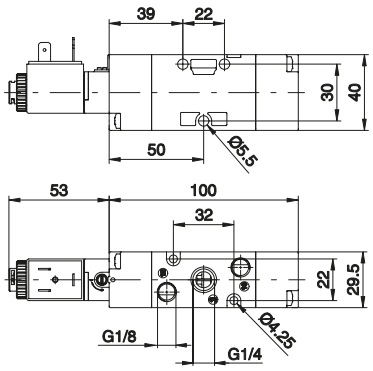

Weight 235 g
Minimum piloting pressure 2 bar

T424.52.0.12.E.Ⓥ

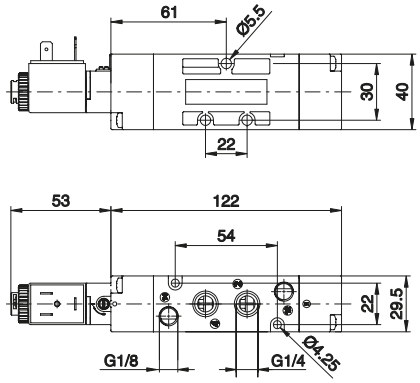

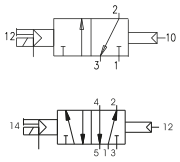

Solenoid - Solenoid (Self-feeding)

Coding: T424.Ⓣ.0.0.Ⓥ

Operational characteristics	
Fluid	Filtered air. No lubrication needed, if applied it shall be continuous
Max working pressure (bar)	10
Temperature °C	-5 ÷ +50
Flow rate at 6 bar with Δp=1 (Nl/min)	1050
Orifice size (mm)	8.5
Working ports size	G 1/4"

Ⓣ	TYPE	
	32 =	3 ways
	52 =	5 ways
Ⓥ	VOLTAGE	
	B04 =	12 V DC
	B05 =	24 V DC
	B09 =	24 V DC (2 W)
	B56 =	24 V 50-60 Hz
	B57 =	110 V 50-60 Hz
	B58 =	230 V 50-60 Hz

Weight 240 g
Minimum piloting pressure 2 bar

T424.32.0.0.Ⓥ

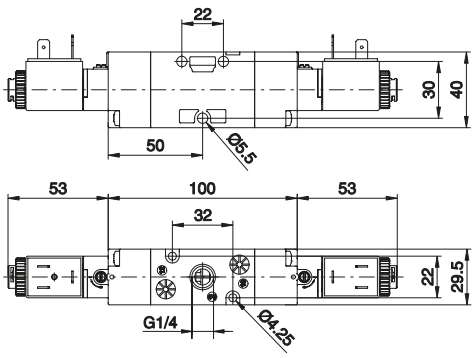

Weight 270 g
Minimum piloting pressure 2 bar

T424.52.0.0.Ⓥ

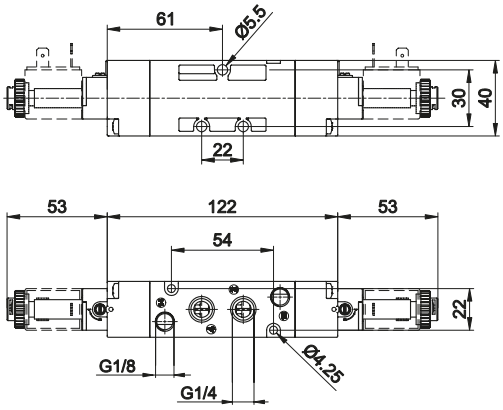

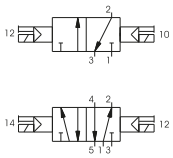

Solenoid - Solenoid (External-feeding)

Coding: T424.Ⓣ.0.0.E.Ⓥ

Operational characteristics	
Fluid	Filtered air. No lubrication needed, if applied it shall be continuous
Max working pressure (bar)	10
Temperature °C	-5 ÷ +50
Flow rate at 6 bar with Δp=1 (Nl/min)	1050
Orifice size (mm)	8.5
Working ports size	G 1/4"
Pilot ports size	G 1/8"

Ⓣ	TYPE	
	32 =	3 ways
	52 =	5 ways
Ⓥ	VOLTAGE	
	B04 =	12 V DC
	B05 =	24 V DC
	B09 =	24 V DC (2 W)
	B56 =	24 V 50-60 Hz
	B57 =	110 V 50-60 Hz
	B58 =	230 V 50-60 Hz

Weight 240 g
Minimum piloting pressure 2 bar

T424.32.0.0.E.Ⓥ

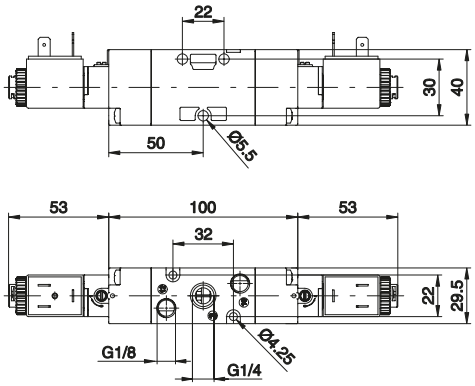

Weight 270 g
Minimum piloting pressure 2 bar

T424.52.0.0.E.Ⓥ

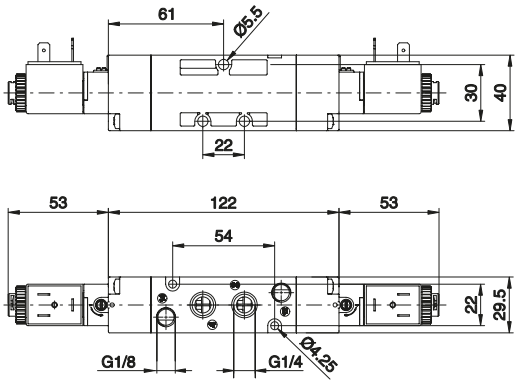

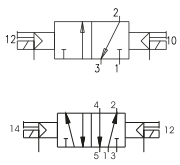

Solenoid - Solenoid (Self-feeding)

Coding: T424.53.Ⓕ.0.0.Ⓥ

Operational characteristics	
Fluid	Filtered air. No lubrication needed, if applied it shall be continuous
Max working pressure (bar)	10
Temperature °C	-5 ÷ +50
Flow rate at 6 bar with Δp=1 (Nl/min)	900
Orifice size (mm)	8.5
Working ports size	G 1/4"

Ⓕ	FUNCTION	
	31 =	Closed centres
	32 =	Open centres
	33 =	Pressured centres
Ⓥ	VOLTAGE	
	B04 =	12 V DC
	B05 =	24 V DC
	B09 =	24 V DC (2 W)
	B56 =	24 V 50-60 Hz
	B57 =	110 V 50-60 Hz
	B58 =	230 V 50-60 Hz

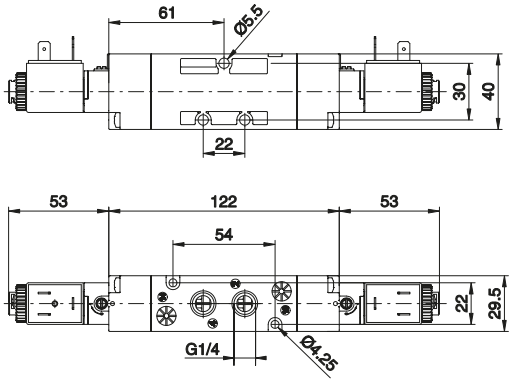

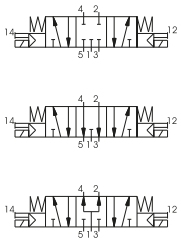

Weight 295 g
Minimum piloting pressure 3 bar

Solenoid - Solenoid (External-feeding)

Coding: T424.53.Ⓕ.0.0.E.Ⓥ

Operational characteristics	
Fluid	Filtered air. No lubrication needed, if applied it shall be continuous
Max working pressure (bar)	10
Temperature °C	-5 ÷ +50
Flow rate at 6 bar with Δp=1 (Nl/min)	900
Orifice size (mm)	8.5
Working ports size	G 1/4"
Pilot ports size	G 1/8"

Ⓕ	FUNCTION	
	31 =	Closed centres
	32 =	Open centres
	33 =	Pressured centres
Ⓥ	VOLTAGE	
	B04 =	12 V DC
	B05 =	24 V DC
	B09 =	24 V DC (2 W)
	B56 =	24 V 50-60 Hz
	B57 =	110 V 50-60 Hz
	B58 =	230 V 50-60 Hz

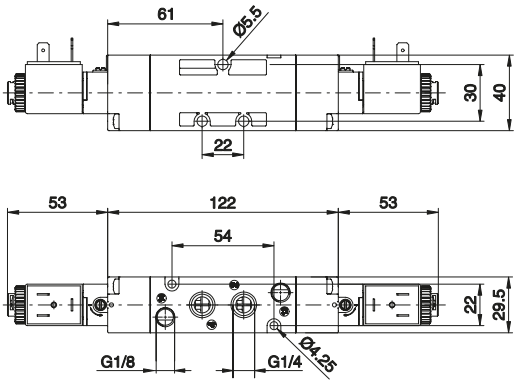

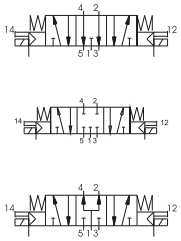

Weight 295 g
Minimum piloting pressure 3 bar

Collectors

Coding: T424.Ⓝ

Ⓝ	N. POSITIONS
	02 = 2 positions (weight 350 g)
	03 = 3 positions (weight 420 g)
	04 = 4 positions (weight 560 g)
	05 = 5 positions (weight 670 g)
	06 = 6 positions (weight 770 g)
	07 = 7 positions (weight 880 g)
	08 = 8 positions (weight 980 g)
	09 = 9 positions (weight 1090 g)
	10 = 10 positions (weight 1200 g)

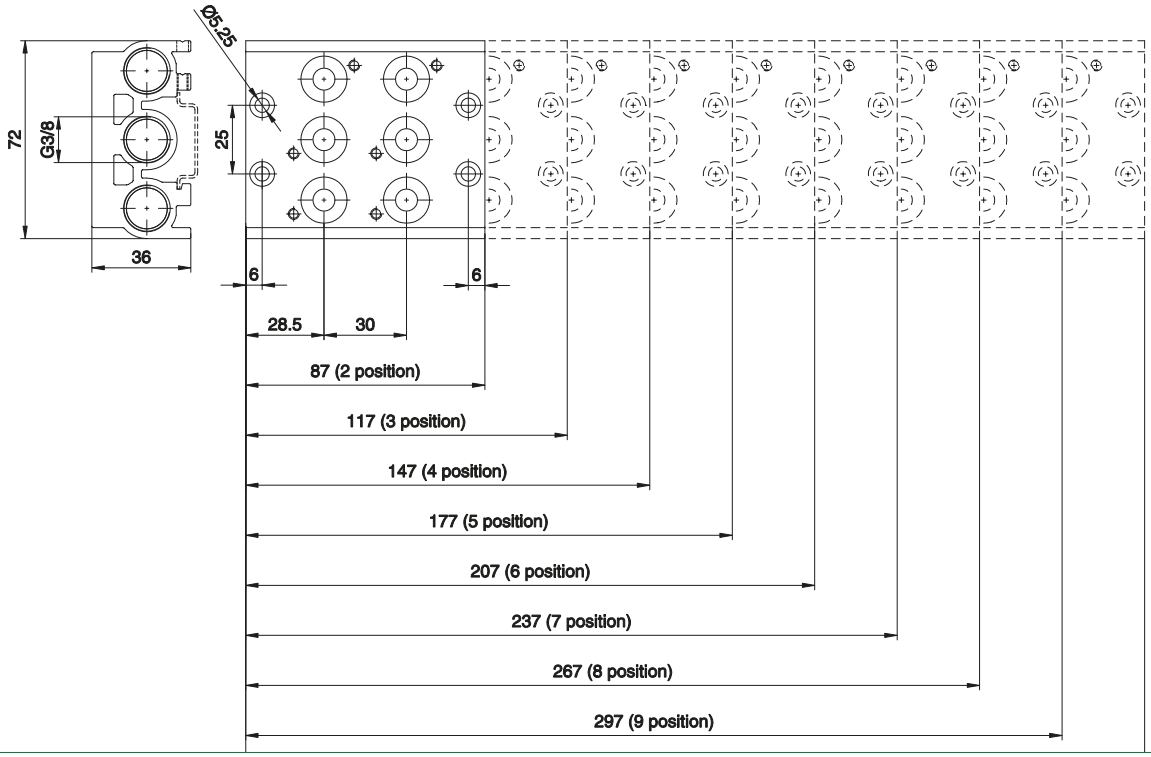

Modular collectors

Coding: T424.Ⓣ

Ⓣ	TYPE
	01 = Single complete base
	01K = Complete modular bases (batches of 15 pieces)
	30K = Hollow bush, complete with O-rings (Nr. 50 pieces)
	31K = Blank bush, complete with O-rings (Nr. 50 pieces)
	32K = Intermediate air intake with screw (Nr. 5 pieces)
	33 = Screw to suite solenoid valves (Nr. 50 pieces)
	34 = Screw for joning bases (Nr. 50 pieces)
	35 = Washer for screw for joning bases (Nr. 50 pieces)
	36 = OR (50 pz)

Closing plate

Coding: T424.00

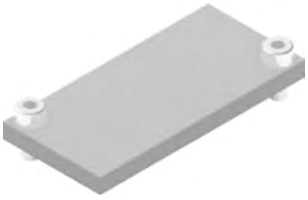

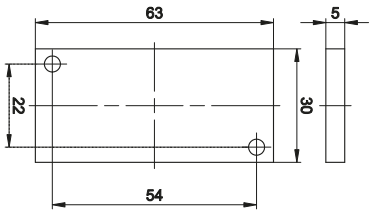

Weight 25 g

Series 1000 - Size 1, 2 & 3

General

5 ways 2 or 3 positions distributors and electric distributors can be used mounted on individual or ganged bases.
These standards are ISO 5599/1, according to which certain dimensions are mandatory, namely, the mounting surface, the pitch of the fastening screws, the characteristic of the electric pilot, the flow rate, the pneumatic connections, and so on.
The design is based on the balanced spool principle with pneumatic or electropneumatic actuators and resetting by mechanically or pneumatically operated spring.
The 3 position closed centres, are obtained by spring operation.
The feed to the actuators on the distributors can be provided either by pressure intake from inlet 1(autofeed) or through the base from inlets 12 and 14 (external feed); there are two separate types of these distributors: one is the Series 1000 and the other is the Series 1010.
The Serie 1000 includes size 1 and 2 and are built of die-cast aluminium. The selection is made by turning a seal fitted between body and operator by 180°, so to utilize external-feed pilot or with internal feed.
Ordering codes are referring to distributors with "M2" mechanics or solenoid valves "S" mounted.
Coil are not included and have to be ordored separately (see Series 300).
"S" homologated c UL us solenoid coil are available (see Series 300).

Use and maintenance

This valves have an average life of 15 million cycles depending on the application and air quality.
Filtered and lubricated air using specified lubricants will reduce the wear of the seals and ensures long and trouble free operation.
Make sure that the conditions of use comply with the pressure, temperature etc. limits indicated and that the fastening screws are tightened with the following maximum torques on distributors Serie 1010.
Size 1 = 4 Nm
Size 2 = 5 Nm
Size 3 = 8 Nm
Repair kits including the spool complete with seals are available for overhauling the valves.
However, although this is a simple operation it should be carried out by a competent person.

ATTENTION: use hydraulic oil class H for lubrication such as MAGNA GC 32 (Castrol).

Construction characteristics

Series 1000	**Size 1**	**Size 2**
Body	Zinc alloy	Aluminium
Operators	Zinc alloy	Aluminium
Spools	Steel	Steel
Seals	NBR	NBR
Spacer	Technopolymer	Aluminium
Springs	Spring steel	Spring steel
Selectors	NBR	NBR

Series 1010	**Size 1**	**Size 2**	**Size 3**
Body	Technopolymer	Technopolymer	Aluminium
Operators	Technopolymer	Technopolymer	Aluminium
Spools	Steel	Steel	Steel
Seals	NBR	NBR	NBR
Spacer	Technopolymer	Technopolymer	Technopolymer
Pistons	Aluminium	Aluminium	Aluminium
Springs	Spring steel	Spring steel	Spring steel

Pneumatic - Spring

Coding: 1001.52.1.9

Operational characteristics	
Fluid	Filtered air. No lubrication needed, if applied it shall be continuous
Max working pressure (bar)	10
Temperature °C	-5 ÷ +70
Flow rate at 6 bar with Δp=1 (Nl/min)	840

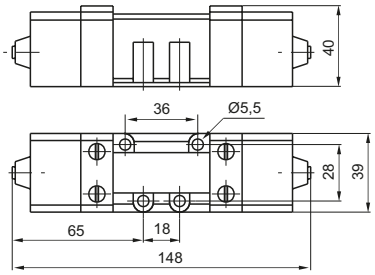

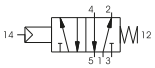

Weight 780 g
Minimum piloting pressure 2,5 bar

Pneumatic - Differential

Coding: 1001.52.1.6

Operational characteristics	
Fluid	Filtered air. No lubrication needed, if applied it shall be continuous
Max working pressure (bar)	10
Temperature °C	-5 ÷ +70
Flow rate at 6 bar with Δp=1 (Nl/min)	840

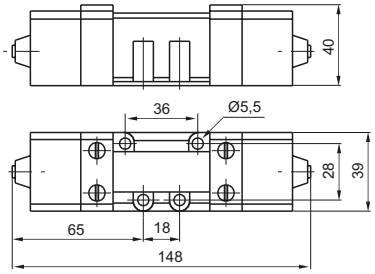

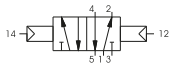

Weight 790 g
Minimum piloting pressure 2 bar

Pneumatic-Pneumatic 5/2

Coding: 1001.52.1.8

Operational characteristics	
Fluid	Filtered air. No lubrication needed, if applied it shall be continuous
Max working pressure (bar)	10
Temperature °C	-5 ÷ +70
Flow rate at 6 bar with Δp=1 (Nl/min)	840

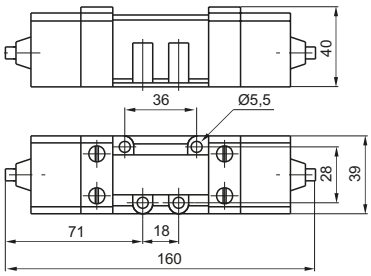

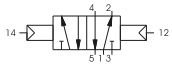

Weight 800 g
Minimum piloting pressure 1,5 bar

Pneumatic-Pneumatic 5/3

Coding: 1001.53.Ⓕ.1.8

Operational characteristics	
Fluid	Filtered air. No lubrication needed, if applied it shall be continuous
Max working pressure (bar)	10
Temperature °C	-5 ÷ +70
Flow rate at 6 bar with Δp=1 (Nl/min)	720

Ⓕ	FUNCTION
	31 = Closed centres
	32 = Open centres
	33 = Pressured centres

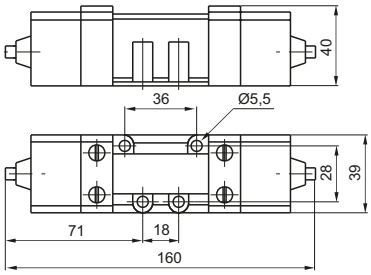

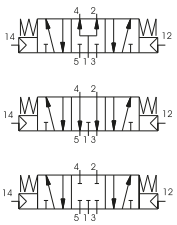

Weight 800 g
Minimum piloting pressure 3 bar

Solenoid - Spring

Coding: 1051.52.3.9.M2

Operational characteristics	
Fluid	Filtered air. No lubrication needed, if applied it shall be continuous
Max working pressure (bar)	10
Temperature °C	-5 ÷ +50
Flow rate at 6 bar with Δp=1 (Nl/min)	840

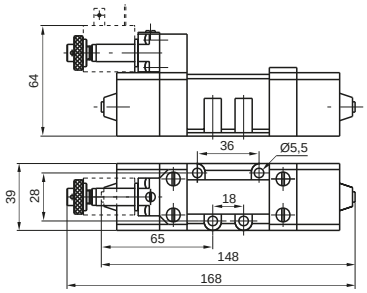

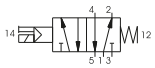

Weight 890 g
Minimum piloting pressure 2,5 bar

Solenoid-Differential

Coding: 1051.52.3.6.M2

Operational characteristics	
Fluid	Filtered air. No lubrication needed, if applied it shall be continuous
Max working pressure (bar)	10
Temperature °C	-5 ÷ +50
Flow rate at 6 bar with Δp=1 (Nl/min)	840

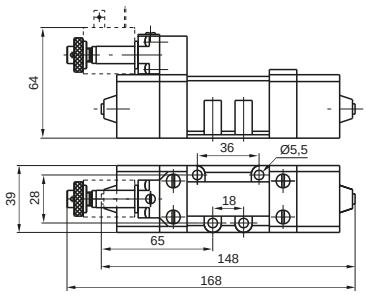

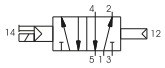

Weight 900 g
Minimum piloting pressure 2 bar

Solenoid-Solenoid 5/2

Coding: 1051.52.3.5.M2

Operational characteristics	
Fluid	Filtered air. No lubrication needed, if applied it shall be continuous
Max working pressure (bar)	10
Temperature °C	-5 ÷ +50
Flow rate at 6 bar with Δp=1 (Nl/min)	840

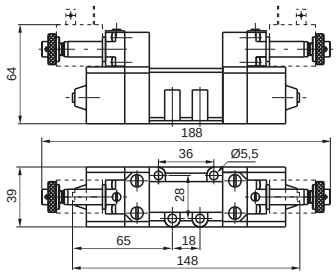

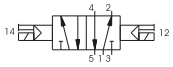

Weight 1040 g
Minimum piloting pressure 1,5 bar

Solenoid-Solenoid 5/3

Coding: 1051.53.Ⓕ.3.5.M2

Operational characteristics	
Fluid	Filtered air. No lubrication needed, if applied it shall be continuous
Max working pressure (bar)	10
Temperature °C	-5 ÷ +50
Flow rate at 6 bar with Δp=1 (Nl/min)	720

	FUNCTION
Ⓕ	**31** = Closed centres
	32 = Open centres
	33 = Pressured centres

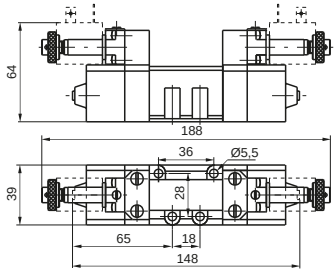

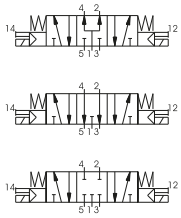

Weight 1040 g
Minimum piloting pressure 3 bar

Pneumatic - Differential

Coding: 1002.52.1.6

Operational characteristics	
Fluid	Filtered air. No lubrication needed, if applied it shall be continuous
Max working pressure (bar)	10
Temperature °C	-5 ÷ +70
Flow rate at 6 bar with Δp=1 (Nl/min)	1700

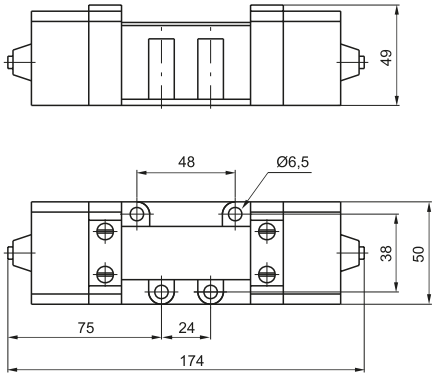

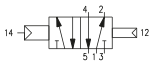

Weight 730 g
Minimum piloting pressure 2 bar

Pneumatic-Pneumatic 5/2

Coding: 1002.52.1.8

Operational characteristics	
Fluid	Filtered air. No lubrication needed, if applied it shall be continuous
Max working pressure (bar)	10
Temperature °C	-5 ÷ +70
Flow rate at 6 bar with Δp=1 (Nl/min)	1700

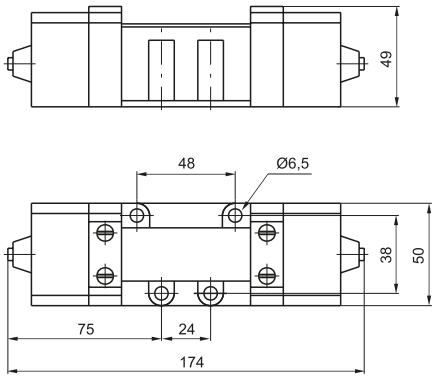

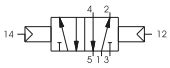

Weight 800 g
Minimum piloting pressure 1,5 bar

Pneumatic-Pneumatic 5/3

Coding: 1002.53.Ⓕ.1.8

Operational characteristics	
Fluid	Filtered air. No lubrication needed, if applied it shall be continuous
Max working pressure (bar)	10
Temperature °C	-5 ÷ +70
Flow rate at 6 bar with Δp=1 (Nl/min)	1700

Ⓕ	FUNCTION
	31 = Closed centres
	32 = Open centres
	33 = Pressured centres

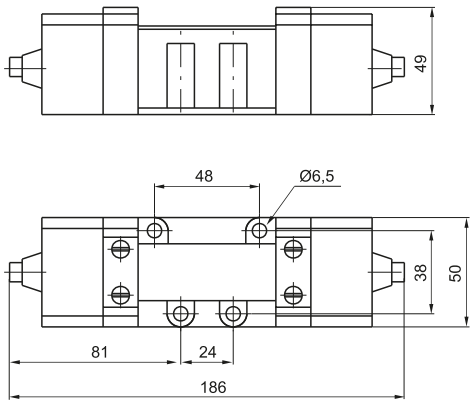

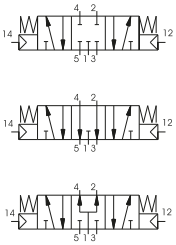

Weight 740 g
Minimum piloting pressure 3 bar

Solenoid-Differential

Coding: 1052.52.3.6.M2

Operational characteristics	
Fluid	Filtered air. No lubrication needed, if applied it shall be continuous
Max working pressure (bar)	10
Temperature °C	-5 ÷ +50
Flow rate at 6 bar with Δp=1 (Nl/min)	1700

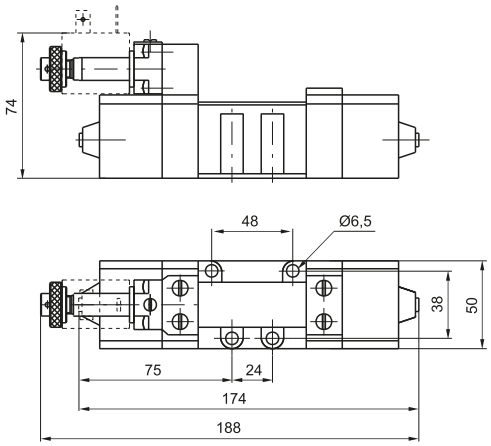

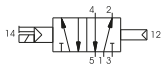

Weight 850 g
Minimum piloting pressure 2 bar

Solenoid-Solenoid 5/2

Coding: 1052.52.3.5.M2

Operational characteristics	
Fluid	Filtered air. No lubrication needed, if applied it shall be continuous
Max working pressure (bar)	10
Temperature °C	-5 ÷ +50
Flow rate at 6 bar with Δp=1 (Nl/min)	1700

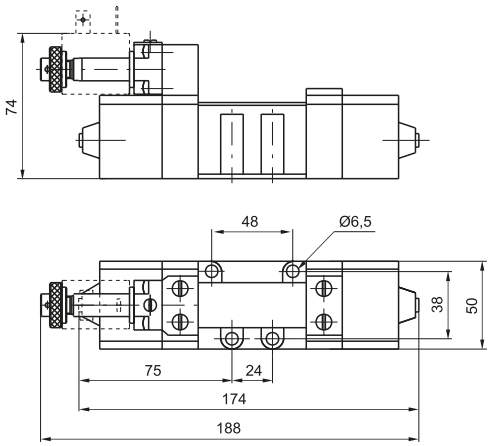

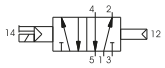

Weight 980 g
Minimum piloting pressure 1,5 bar

Solenoid-Solenoid 5/3

Coding: 1052.53.Ⓕ.3.5.M2

Operational characteristics	
Fluid	Filtered air. No lubrication needed, if applied it shall be continuous
Max working pressure (bar)	10
Temperature °C	-5 ÷ +50
Flow rate at 6 bar with Δp=1 (Nl/min)	1700

Ⓕ	FUNCTION
	31 = Closed centres
	32 = Open centres
	33 = Pressured centres

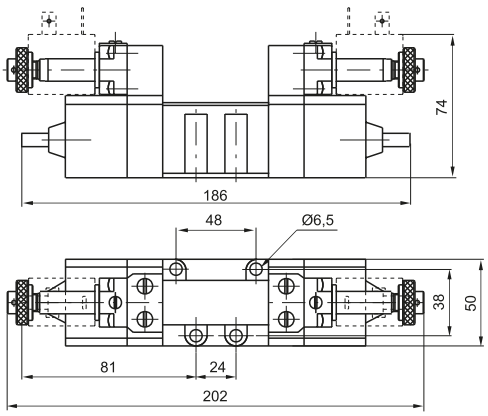

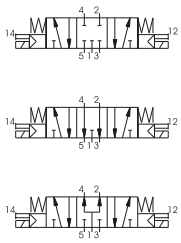

Weight 980 g
Minimum piloting pressure 3 bar

Base for 32 mm Solenoid valve

Coding: 1001.05

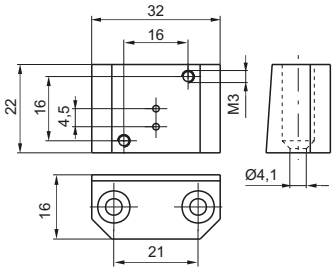

Weight 60 g

Base CNOMO for 32 mm Solenoid valve

Coding: 1001.04

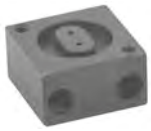

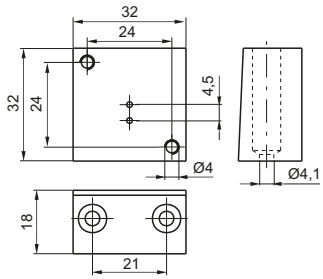

Weight 90 g

Base with bottom connections size 1

Coding: 1001.00

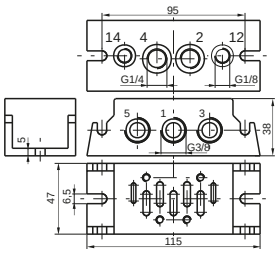

Weight 320 g
1=INLET PORT 2-4=OUTLET PORTS$3-5=EXHAUST PORTS
12-14=PILOT PORTS

Base with side connections size 1

Coding: 1001.01

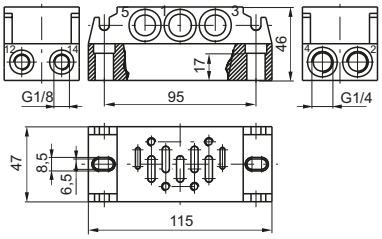

Weight 445 g
1=INLET PORT 2-4=OUTLET PORTS$3-5=EXHAUST PORTS
12-14=PILOT PORTS

Inlet blocks

Coding: 1001.02

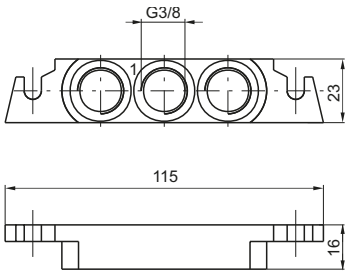

Weight 55 g

Base with bottom connections size 2

Coding: 1002.00

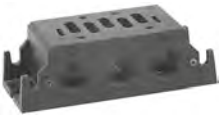

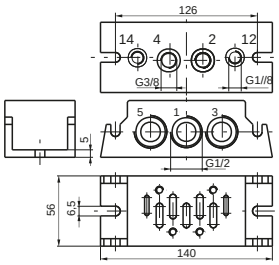

Weight 520 g
1=INLET PORT 2-4=OUTLET PORTS$3-5=EXHAUST PORTS
12-14=PILOT PORTS

Pneumatic - Spring

Coding: 1011.52.1.9

Operational characteristics	
Fluid	Filtered air. No lubrication needed, if applied it shall be continuous
Max working pressure (bar)	10
Temperature °C	-5 ÷ +50
Flow rate at 6 bar with Δp=1 (Nl/min)	900

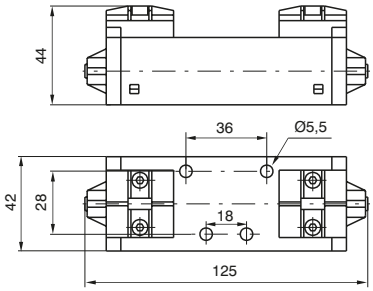

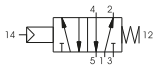

Weight 230 g
Minimum piloting pressure 2,5 bar

Pneumatic - Differential

Coding: 1011.52.1.6

Operational characteristics	
Fluid	Filtered air. No lubrication needed, if applied it shall be continuous
Max working pressure (bar)	10
Temperature °C	-5 ÷ +50
Flow rate at 6 bar with Δp=1 (Nl/min)	900

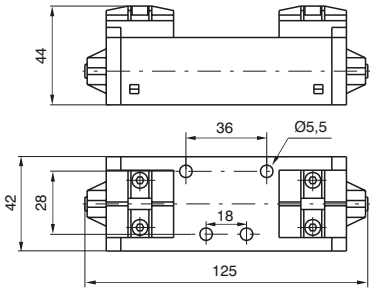

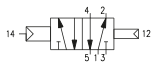

Weight 240 g
Minimum piloting pressure 2 bar

Pneumatic-Pneumatic 5/2

Coding: 1011.52.1.8

Operational characteristics	
Fluid	Filtered air. No lubrication needed, if applied it shall be continuous
Max working pressure (bar)	10
Temperature °C	-5 ÷ +50
Flow rate at 6 bar with Δp=1 (Nl/min)	900

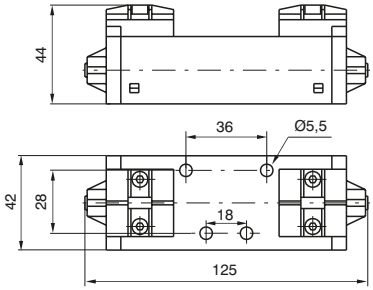

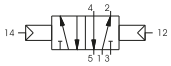

Weight 240 g
Minimum piloting pressure 1,5 bar

Pneumatic-Pneumatic 5/3

Coding: 1011.53.Ⓕ.1.8

Operational characteristics	
Fluid	Filtered air. No lubrication needed, if applied it shall be continuous
Max working pressure (bar)	10
Temperature °C	-5 ÷ +50
Flow rate at 6 bar with Δp=1 (Nl/min)	900

	FUNCTION
Ⓕ	**31** = Closed centres
	32 = Open centres
	33 = Pressured centres

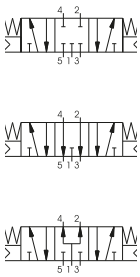

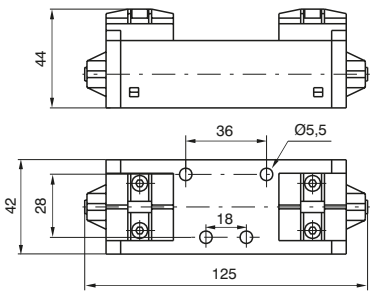

Weight 240 g
Minimum piloting pressure 3 bar

Solenoid - Spring

Coding: 1011.52.3.9.Ⓜ

Operational characteristics	
Fluid	Filtered air. No lubrication needed, if applied it shall be continuous
Max working pressure (bar)	10
Temperature °C	-5 ÷ +50
Flow rate at 6 bar with Δp=1 (Nl/min)	900

Ⓜ	MECHANICAL CODE
	SEE VALVES SERIES 300 CNOMO

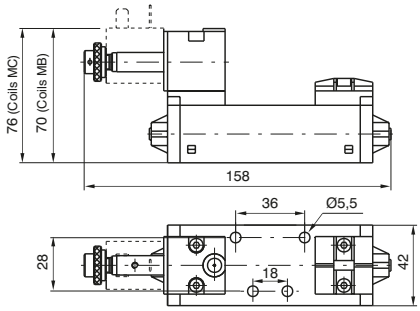

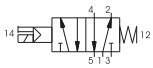

Weight 290 g
Minimum piloting pressure 2,5 bar

Solenoid-Differential

Coding: 1011.52.3.6.Ⓜ

Operational characteristics	
Fluid	Filtered air. No lubrication needed, if applied it shall be continuous
Max working pressure (bar)	10
Temperature °C	-5 ÷ +50
Flow rate at 6 bar with Δp=1 (Nl/min)	900

Ⓜ	MECHANICAL CODE
	SEE VALVES SERIES 300 CNOMO

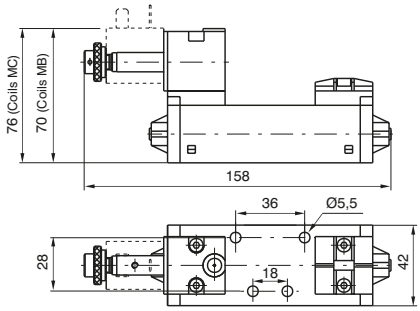

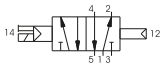

Weight 290 g
Minimum piloting pressure 2 bar

Solenoid-Solenoid 5/2

Coding: 1011.52.3.5.Ⓜ

Operational characteristics	
Fluid	Filtered air. No lubrication needed, if applied it shall be continuous
Max working pressure (bar)	10
Temperature °C	-5 ÷ +50
Flow rate at 6 bar with Δp=1 (Nl/min)	900

Ⓜ	MECHANICAL CODE
	SEE VALVES SERIES 300 CNOMO

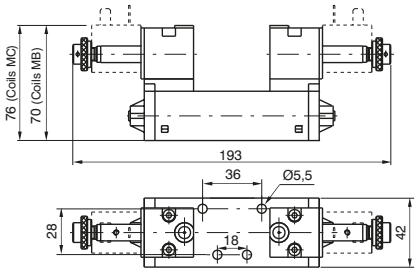

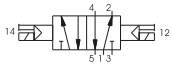

Weight 350 g
Minimum piloting pressure 1,5 bar

Solenoid-Solenoid 5/3

Coding: 1011.53.Ⓕ.3.5.Ⓜ

Operational characteristics	
Fluid	Filtered air. No lubrication needed, if applied it shall be continuous
Max working pressure (bar)	10
Temperature °C	-5 ÷ +50
Flow rate at 6 bar with Δp=1 (Nl/min)	900

Ⓕ	FUNCTION
	31 = Closed centres
	32 = Open centres
	33 = Pressured centres
Ⓜ	MECHANICAL CODE
	SEE VALVES SERIES 300 CNOMO

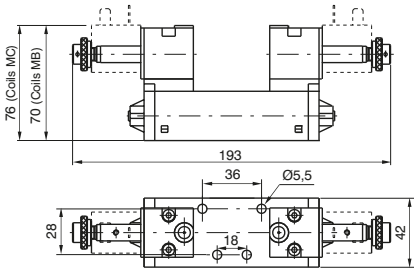

Weight 350 g
Minimum piloting pressure 3 bar

Pneumatic - Spring

Coding: 1012.52.1.9

Operational characteristics	
Fluid	Filtered air. No lubrication needed, if applied it shall be continuous
Max working pressure (bar)	10
Temperature °C	-5 ÷ +50
Flow rate at 6 bar with Δp=1 (Nl/min)	1600

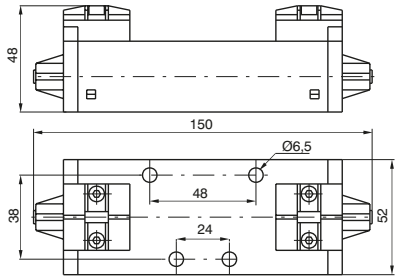

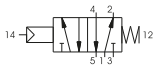

Weight 300 g
Minimum piloting pressure 2,5 bar

Pneumatic - Differential

Coding: 1012.52.1.6

Operational characteristics	
Fluid	Filtered air. No lubrication needed, if applied it shall be continuous
Max working pressure (bar)	10
Temperature °C	-5 ÷ +50
Flow rate at 6 bar with Δp=1 (Nl/min)	1600

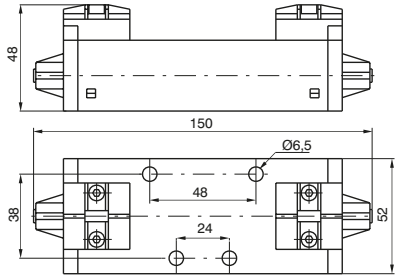

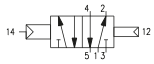

Weight 310 g
Minimum piloting pressure 2 bar

Pneumatic-Pneumatic 5/2

Coding: 1012.52.1.8

Operational characteristics	
Fluid	Filtered air. No lubrication needed, if applied it shall be continuous
Max working pressure (bar)	10
Temperature °C	-5 ÷ +50
Flow rate at 6 bar with Δp=1 (Nl/min)	1600

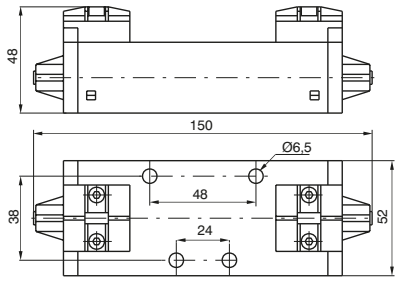

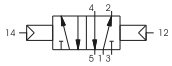

Weight 310 g
Minimum piloting pressure 1,5 bar

Pneumatic-Pneumatic 5/3

Coding:: 1012.53.Ⓕ.1.8

Operational characteristics	
Fluid	Filtered air. No lubrication needed, if applied it shall be continuous
Max working pressure (bar)	10
Temperature °C	-5 ÷ +50
Flow rate at 6 bar with Δp=1 (Nl/min)	1600

	FUNCTION
Ⓕ	**31** = Closed centres
	32 = Open centres
	33 = Pressured centres

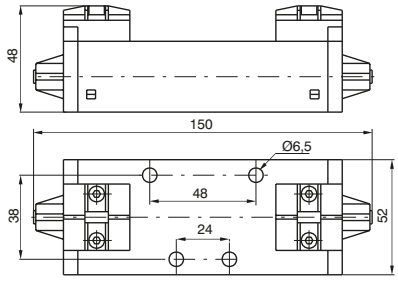

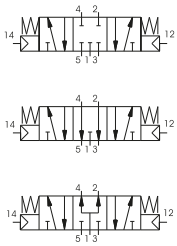

Weight 310 g
Minimum piloting pressure 3 bar

1012.53.Ⓕ.1.8

Solenoid - Spring

Coding: 1012.52.3.9.Ⓜ

Operational characteristics	
Fluid	Filtered air. No lubrication needed, if applied it shall be continuous
Max working pressure (bar)	10
Temperature °C	-5 ÷ +50
Flow rate at 6 bar with Δp=1 (Nl/min)	1600

Ⓜ	MECHANICAL CODE
	SEE VALVES SERIES 300 CNOMO

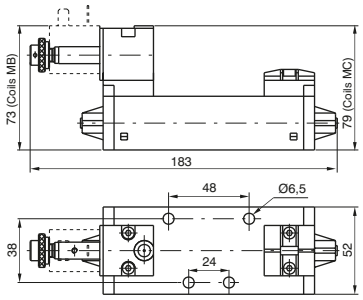

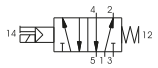

Weight 360 g
Minimum piloting pressure 2,5 bar

Solenoid-Differential

Coding: 1012.52.3.6.Ⓜ

Operational characteristics	
Fluid	Filtered air. No lubrication needed, if applied it shall be continuous
Max working pressure (bar)	10
Temperature °C	-5 ÷ +50
Flow rate at 6 bar with Δp=1 (Nl/min)	1600

Ⓜ	MECHANICAL CODE
	SEE VALVES SERIES 300 CNOMO

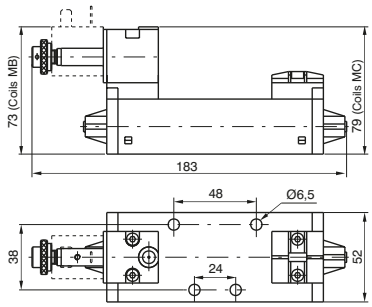

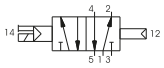

Weight 360 g
Minimum piloting pressure 2 bar

Solenoid-Differential

Coding: 1012.52.3.5.Ⓜ

Operational characteristics	
Fluid	Filtered air. No lubrication needed, if applied it shall be continuous
Max working pressure (bar)	10
Temperature °C	-5 ÷ +50
Flow rate at 6 bar with Δp=1 (Nl/min)	1600

Ⓜ	MECHANICAL CODE
	SEE VALVES SERIES 300 CNOMO

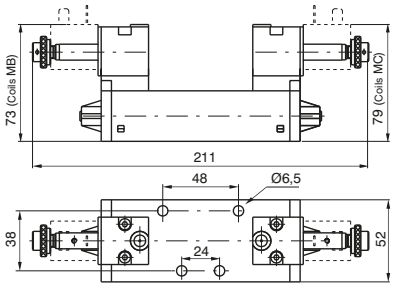

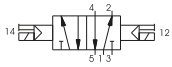

Weight 420 g
Minimum piloting pressure 1,5 bar

Solenoid-Solenoid 5/3

Coding: 1012.53.Ⓕ.3.5.Ⓜ

Operational characteristics	
Fluid	Filtered air. No lubrication needed, if applied it shall be continuous
Max working pressure (bar)	10
Temperature °C	-5 ÷ +50
Flow rate at 6 bar with Δp=1 (Nl/min)	1600

Ⓕ	FUNCTION
	31 = Closed centres
	32 = Open centres
	33 = Pressured centres
Ⓜ	MECHANICAL CODE
	SEE VALVES SERIES 300 CNOMO

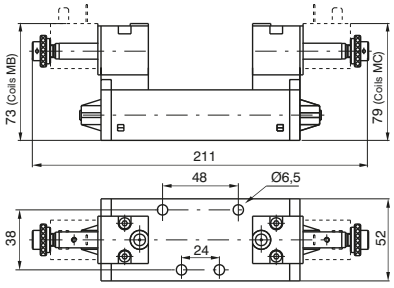

Weight 420 g
Minimum piloting pressure 3 bar

1012.53.Ⓕ.3.5.Ⓜ

Pneumatic - Spring

Coding: 1013.52.1.9

Operational characteristics	
Fluid	Filtered air. No lubrication needed, if applied it shall be continuous
Max working pressure (bar)	10
Temperature °C	-5 ÷ +50
Flow rate at 6 bar with Δp=1 (Nl/min)	3600

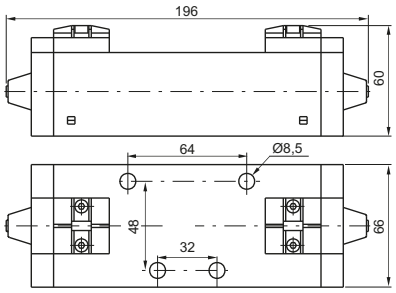

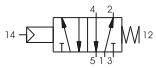

Weight 1000 g
Minimum piloting pressure 2,5 bar

Pneumatic - Differential

Coding: 1013.52.1.6

Operational characteristics	
Fluid	Filtered air. No lubrication needed, if applied it shall be continuous
Max working pressure (bar)	10
Temperature °C	-5 ÷ +50
Flow rate at 6 bar with Δp=1 (Nl/min)	3600

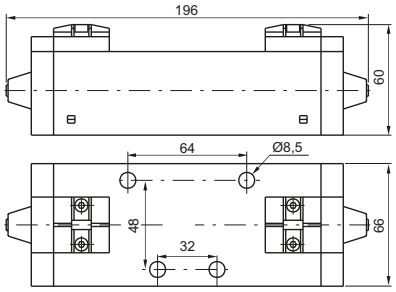

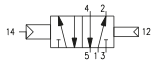

Weight 1020 g
Minimum piloting pressure 2 bar

Pneumatic-Pneumatic 5/2

Coding: 1013.52.1.8

Operational characteristics	
Fluid	Filtered air. No lubrication needed, if applied it shall be continuous
Max working pressure (bar)	10
Temperature °C	-5 ÷ +50
Flow rate at 6 bar with Δp=1 (Nl/min)	3600

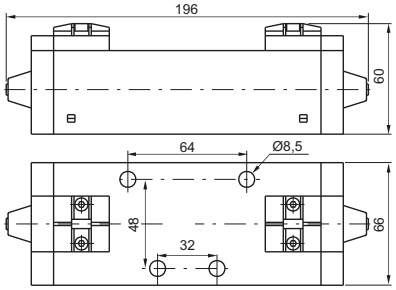

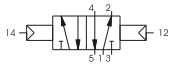

Weight 1050 g
Minimum piloting pressure 1,5 bar

Pneumatic-Pneumatic 5/3

Coding: 1013.53.Ⓕ.1.8

Operational characteristics	
Fluid	Filtered air. No lubrication needed, if applied it shall be continuous
Max working pressure (bar)	10
Temperature °C	-5 ÷ +50
Flow rate at 6 bar with Δp=1 (Nl/min)	3000

	FUNCTION
Ⓕ	**31** = Closed centres
	32 = Open centres
	33 = Pressured centres

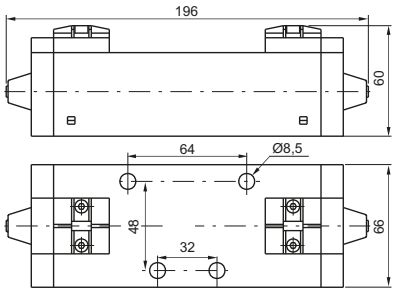

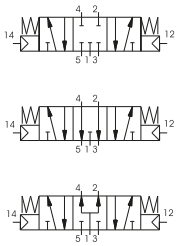

Weight 1050 g
Minimum piloting pressure 3 bar

1013.53.Ⓕ.1.8

Solenoid - Spring

Coding: 1013.52.3.9.Ⓜ

Operational characteristics	
Fluid	Filtered air. No lubrication needed, if applied it shall be continuous
Max working pressure (bar)	10
Temperature °C	-5 ÷ +50
Flow rate at 6 bar with Δp=1 (Nl/min)	3600

Ⓜ	MECHANICAL CODE
	SEE VALVES SERIES 300 CNOMO

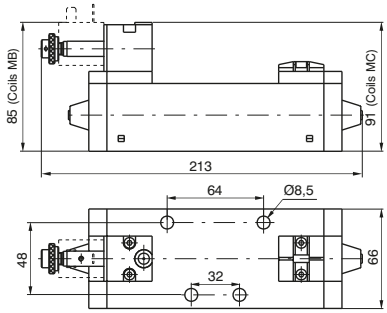

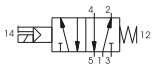

Weight 1060 g
Minimum piloting pressure 2,5 bar

Solenoid-Differential

Coding: 1013.52.3.6.Ⓜ

Operational characteristics	
Fluid	Filtered air. No lubrication needed, if applied it shall be continuous
Max working pressure (bar)	10
Temperature °C	-5 ÷ +50
Flow rate at 6 bar with Δp=1 (Nl/min)	3600

Ⓜ	MECHANICAL CODE
	SEE VALVES SERIES 300 CNOMO

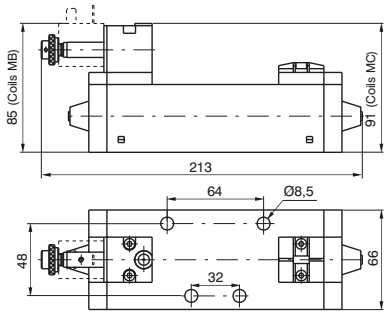

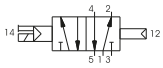

Weight 1080 g
Minimum piloting pressure 2 bar

Solenoid-Solenoid 5/2

Coding: 1013.52.3.5.Ⓜ

Operational characteristics	
Fluid	Filtered air. No lubrication needed, if applied it shall be continuous
Max working pressure (bar)	10
Temperature °C	-5 ÷ +50
Flow rate at 6 bar with Δp=1 (Nl/min)	3600

Ⓜ	MECHANICAL CODE
	SEE VALVES SERIES 300 CNOMO

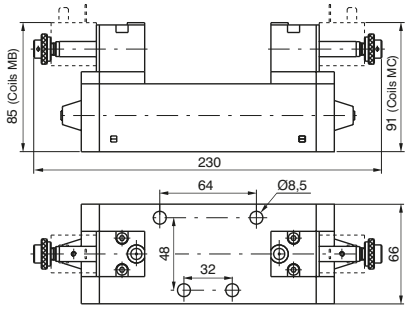

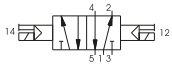

Weight 1170 g
Minimum piloting pressure 1,5 bar

Solenoid-Solenoid 5/3

Coding: 1013.53.Ⓕ.3.5.Ⓜ

Operational characteristics	
Fluid	Filtered air. No lubrication needed, if applied it shall be continuous
Max working pressure (bar)	10
Temperature °C	-5 ÷ +50
Flow rate at 6 bar with Δp=1 (Nl/min)	3000

Ⓕ	FUNCTION
	31 = Closed centres
	32 = Open centres
	33 = Pressured centres
Ⓜ	MECHANICAL CODE
	SEE VALVES SERIES 300 CNOMO

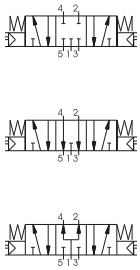

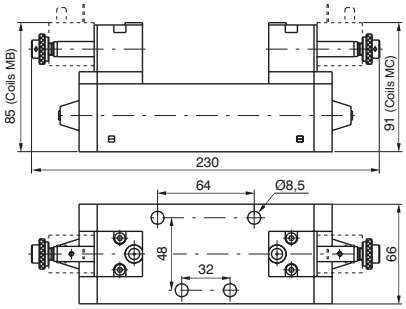

Weight 1170 g
Minimum piloting pressure 3 bar

1013.53.Ⓕ.3.5.Ⓜ

Series 1100 - Modular bases with side and bottom connections

General

These bases are manufactured with the outlet and pilot ports on both the sides and the bottom faces giving the option for use with any application.
Unused ports must be blanked off using threaded plugs which are not included in the part number or price.
To isolate bases from each other for use with different supply pressures ports 1, 3 & 5 should be plugged underneath the seal.
The codes are:
1101.17 (size 1) - 1102.17 (size 2) - 1103.17 (size 3)

Modular bases

Coding: 110Ⓣ.00

Ⓣ	SIZE
	1 = Size 1
	2 = Size 2
	3 = Size 3

Weight 240 g

1101.00

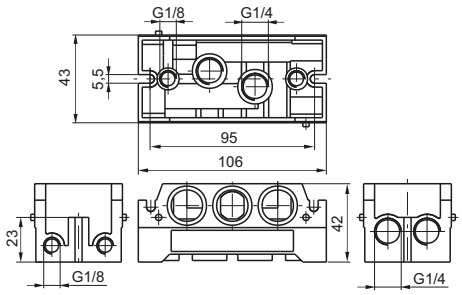

Weight 340 g

1102.00

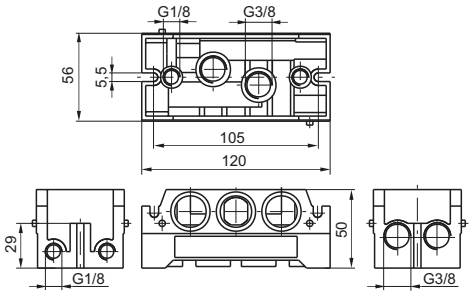

Weight 950 g

1103.00

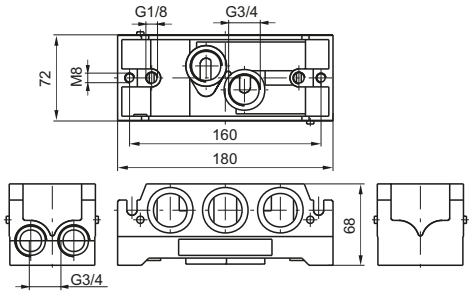

Inlet blocks, Size 1

Coding: 1101.09

Weight 100 g

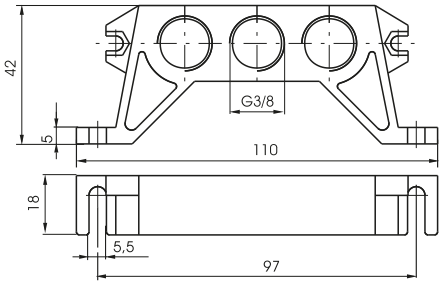

Inlet blocks, Size 3

Coding: 1103.11

Weight 840 g

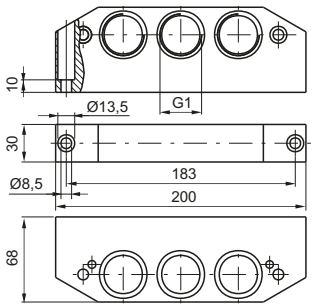

Inlet blocks

Coding: 110Ⓣ.Ⓝ

Ⓣ	SIZE
	1 = Size 1
	2 = Size 2
Ⓝ	WORKING PORTS SIZE
	10 = Universal
	11 = In line
	12 = Top connections
	13 = Bottom connections

Weight 160 g

1101.Ⓝ

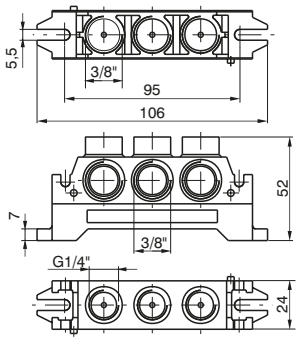

Weight 230 g

1102.Ⓝ

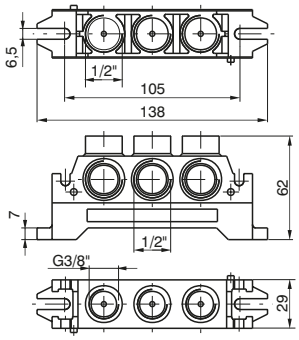

Single use bases

Coding: 110Ⓣ.Ⓕ

Ⓣ	SIZE
	1 = Size 1
	2 = Size 2
	3 = Size 3
Ⓕ	SHAPE
	14 = Shape A
	15 = Shape B (only for sizes 1 & 2)

Weight 160 g

1101.14

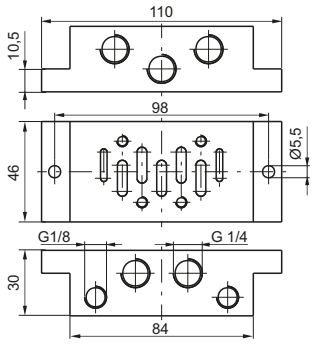

Weight 190 g

1101.15

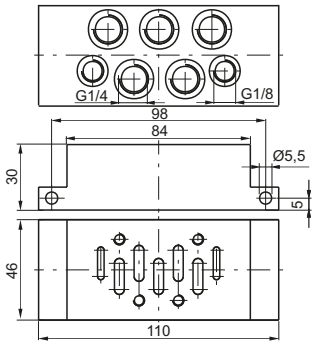

Weight 190 g

1102.14

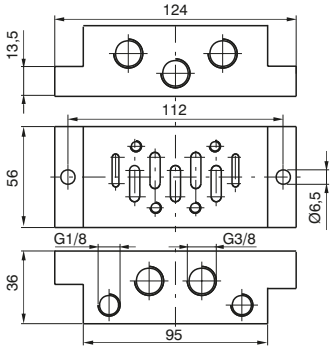

Weight 220 g

1102.15

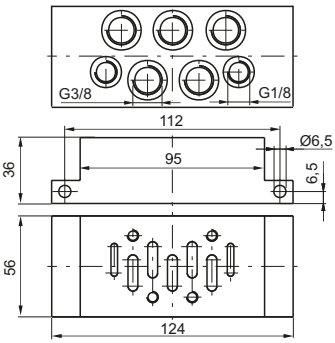

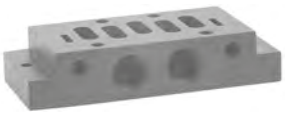

Weight 600 g

1103.14

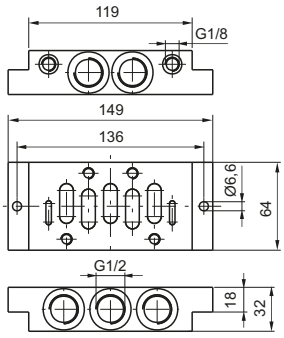

Closing plate

Coding: 110Ⓣ.16

	SIZE
Ⓣ	**1** = Size 1
	2 = Size 2
	3 = Size 3

1101.16

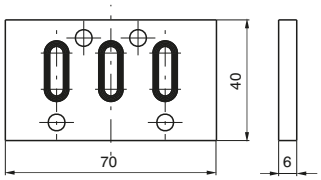

1102.16

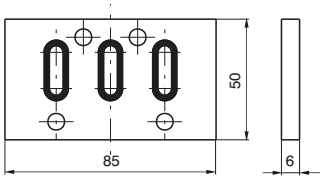

1103.16

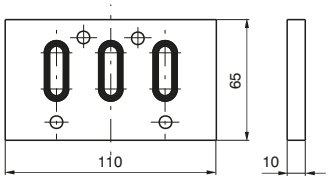

Base adaptor

Coding: 1100.Ⓣ

	SIZE
Ⓣ	**2** = Sizes 2-1
	3 = Sizes 3-2

Weight 110 g

1100.2-1

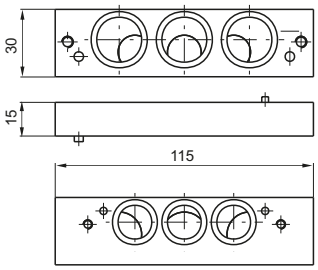

Weight 590 g

1100.3-2

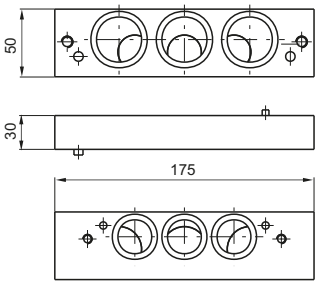

Series 1000 M12 - Size 1, 2 & 3

General

The ISO 5599/1 Solenoid valves Series 1000 M12 are available in three sizes with flow rates from 900 Nl/min for size 1 up to the 3600 Nl/min for size 3.
The standard features of the ISO valves are still included, however, they are now combined with a M12 electrical connector located in the middle of the valve to manage the electrical signals.
Versions are available to suit valves with both single and double 24VDC solenoids complete with IP65 protection.
All version are supplied with LED indicators
"Shifting time of pneumatic directional control valves or moving parts, logic devices were measured in accordance to ISO 12238:2001, Pneumatic fluid power-Directional control valves-Measurement of shifting time"

Electrical characteristics

Electrical connector M12x1
Protection degree IP65
Input voltage 24VDC
Nominal power 2,3W
LED indentification

Monostable version

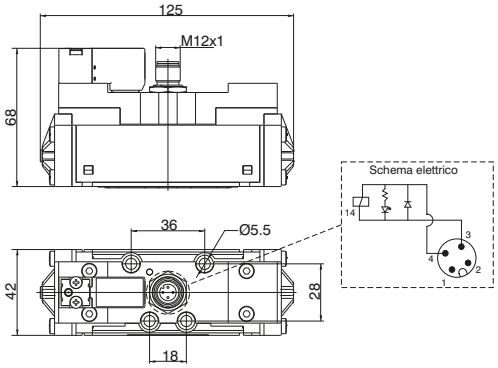

Bistable version

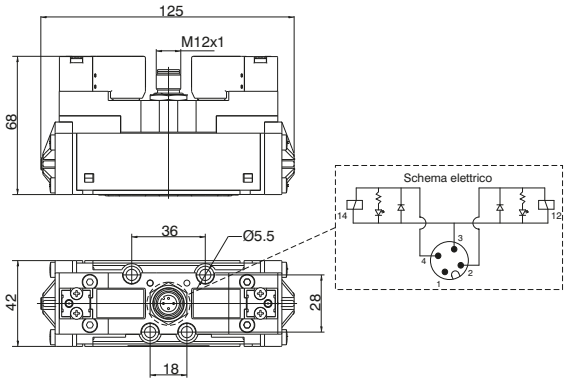

Solenoid - Spring

Coding: 1111.52.3.9.Ⓣ

Ⓣ	COIL VOLTAGE
	12P = 24VDC

Operational characteristics	
Fluid	Filtered air. No lubrication needed, if applied it shall be continuous
Max working pressure (bar)	10
Minimum piloting pressure (bar)	2.5
Temperature °C	-5 ÷ +50
Flow rate at 6 bar with Δp=1 (Nl/min)	900
Responce time according to ISO 12238, activation time (ms)	16
Responce time according to ISO 12238, deactivation time (ms)	122

Shifting time of pneumatic directional control valves or moving parts, logic devices were measured in accordance to ISO 12238:2001

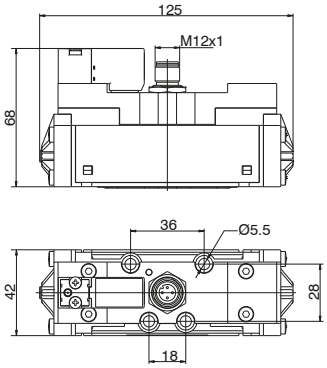

Weight 350 g

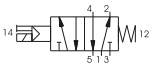

Solenoid-Differential

Coding: 1111.52.3.6.Ⓣ

Ⓣ	COIL VOLTAGE
	12P = 24VDC

Operational characteristics	
Fluid	Filtered air. No lubrication needed, if applied it shall be continuous
Max working pressure (bar)	10
Minimum piloting pressure (bar)	2
Temperature °C	-5 ÷ +50
Flow rate at 6 bar with Δp=1 (Nl/min)	900
Responce time according to ISO 12238, activation time (ms)	32
Responce time according to ISO 12238, deactivation time (ms)	51

Shifting time of pneumatic directional control valves or moving parts, logic devices were measured in accordance to ISO 12238:2001

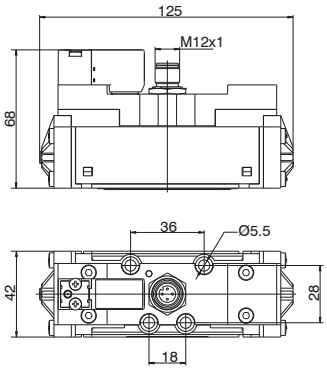

Weight 356 g

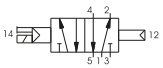

Solenoid-Solenoid 5/2

Coding: 1111.52.3.5.Ⓣ

Ⓣ	COIL VOLTAGE
	12P = 24VDC

Operational characteristics	
Fluid	Filtered air. No lubrication needed, if applied it shall be continuous
Max working pressure (bar)	10
Minimum piloting pressure (bar)	1.5
Temperature °C	-5 ÷ +50
Flow rate at 6 bar with Δp=1 (Nl/min)	900
Responce time according to ISO 12238, activation time (ms)	13
Responce time according to ISO 12238, deactivation time (ms)	14

Shifting time of pneumatic directional control valves or moving parts, logic devices were measured in accordance to ISO 12238:2001

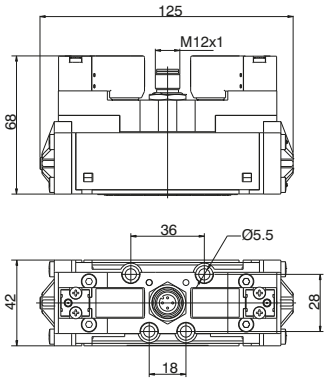

Weight 390 g

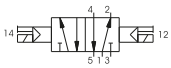

Solenoid-Solenoid 5/3

Coding: 1111.53.Ⓕ.3.5.Ⓣ

Operational characteristics	
Fluid	Filtered air. No lubrication needed, if applied it shall be continuous
Max working pressure (bar)	10
Minimum piloting pressure (bar)	3
Temperature °C	-5 ÷ +50
Flow rate at 6 bar with Δp=1 (Nl/min)	900
Responce time according to ISO 12238, activation time (ms)	18 (Closed centres) 18 (Open centres) 19 (Pressured centres)
Responce time according to ISO 12238, deactivation time (ms)	19 (Closed centres) 20 (Open centres) 18 (Pressured centres)

Shifting time of pneumatic directional control valves or moving parts, logic devices were measured in accordance to ISO 12238:2001

Ⓕ	FUNCTION
	31 = Closed centres
	32 = Open centres
	33 = Pressured centres
Ⓣ	COIL VOLTAGE
	12P = 24VDC

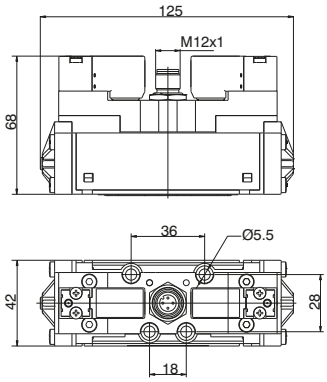

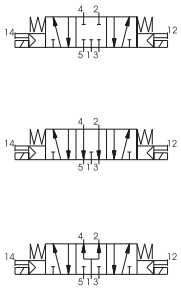

Weight 392 g

Solenoid - Spring

Coding: 1112.52.3.9.T

Operational characteristics	
Fluid	Filtered air. No lubrication needed, if applied it shall be continuous
Max working pressure (bar)	10
Minimum piloting pressure (bar)	2.5
Temperature °C	-5 ÷ +50
Flow rate at 6 bar with Δp=1 (Nl/min)	1600
Responce time according to ISO 12238, activation time (ms)	24
Responce time according to ISO 12238, deactivation time (ms)	124

T	COIL VOLTAGE
12P	= 24VDC

Shifting time of pneumatic directional control valves or moving parts, logic devices were measured in accordance to ISO 12238:2001

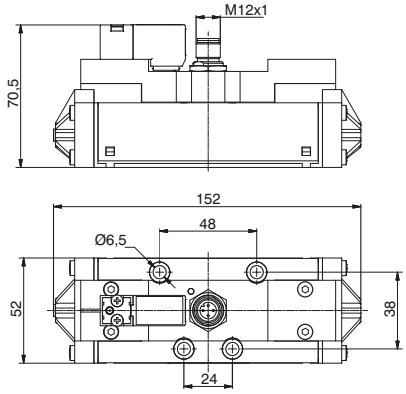

Weight 510 g

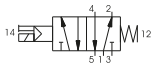

Solenoid-Differential

Coding: 1112.52.3.6.T

Operational characteristics	
Fluid	Filtered air. No lubrication needed, if applied it shall be continuous
Max working pressure (bar)	10
Minimum piloting pressure (bar)	2
Temperature °C	-5 ÷ +50
Flow rate at 6 bar with Δp=1 (Nl/min)	1600
Responce time according to ISO 12238, activation time (ms)	37
Responce time according to ISO 12238, deactivation time (ms)	90

T	COIL VOLTAGE
12P	= 24VDC

Shifting time of pneumatic directional control valves or moving parts, logic devices were measured in accordance to ISO 12238:2001

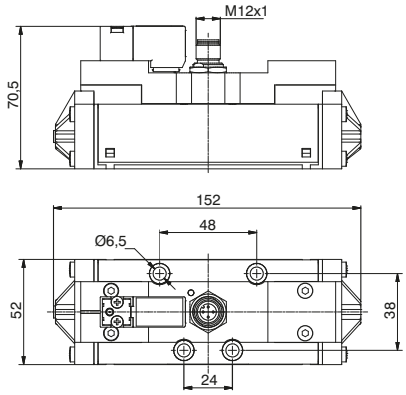

Weight 515 g

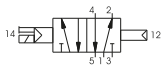

Solenoid-Solenoid 5/2

Coding: 1112.52.3.5.T

Operational characteristics	
Fluid	Filtered air. No lubrication needed, if applied it shall be continuous
Max working pressure (bar)	10
Minimum piloting pressure (bar)	1.5
Temperature °C	-5 ÷ +50
Flow rate at 6 bar with Δp=1 (Nl/min)	1600
Responce time according to ISO 12238, activation time (ms)	17
Responce time according to ISO 12238, deactivation time (ms)	20

T	COIL VOLTAGE
12P	= 24VDC

Shifting time of pneumatic directional control valves or moving parts, logic devices were measured in accordance to ISO 12238:2001

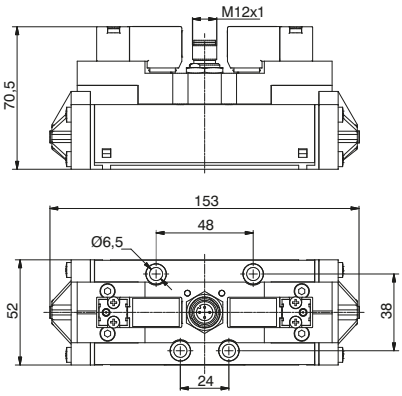

Weight 550 g

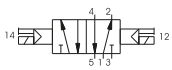

Solenoid-Solenoid 5/3

Coding: 1112.53.Ⓕ.3.5.Ⓣ

Operational characteristics	
Fluid	Filtered air. No lubrication needed, if applied it shall be continuous
Max working pressure (bar)	10
Minimum piloting pressure (bar)	3
Temperature °C	-5 ÷ +50
Flow rate at 6 bar with Δp=1 (Nl/min)	1600
Responce time according to ISO 12238, activation time (ms)	18 (Closed centres) 18 (Open centres) 20 (Pressured centres)
Responce time according to ISO 12238, deactivation time (ms)	112 (Closed centres) 106 (Open centres) 118 (Pressured centres)

Shifting time of pneumatic directional control valves or moving parts, logic devices were measured in accordance to ISO 12238:2001

Ⓕ	FUNCTION
	31 = Closed centres
	32 = Open centres
	33 = Pressured centres
Ⓣ	COIL VOLTAGE
	12P = 24VDC

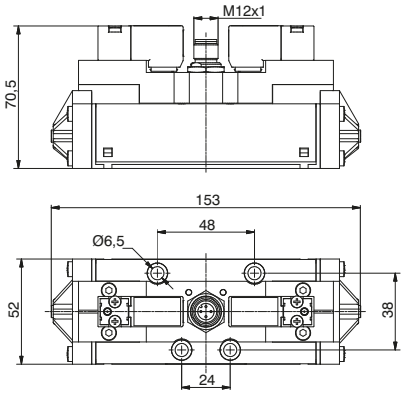

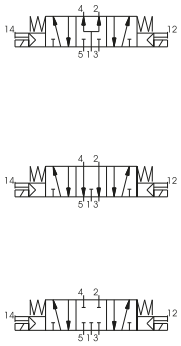

Weight 560 g

Solenoid - Spring

Coding: 1113.52.3.9.Ⓣ

Operational characteristics	
Fluid	Filtered air. No lubrication needed, if applied it shall be continuous
Max working pressure (bar)	10
Minimum piloting pressure (bar)	2.5
Temperature °C	-5 ÷ +50
Flow rate at 6 bar with Δp=1 (Nl/min)	3600
Responce time according to ISO 12238, activation time (ms)	46
Responce time according to ISO 12238, deactivation time (ms)	254

Shifting time of pneumatic directional control valves or moving parts, logic devices were measured in accordance to ISO 12238:2001

Ⓣ	COIL VOLTAGE
	12P = 24VDC

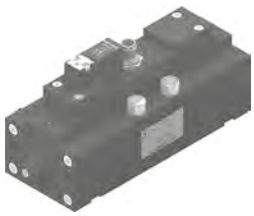

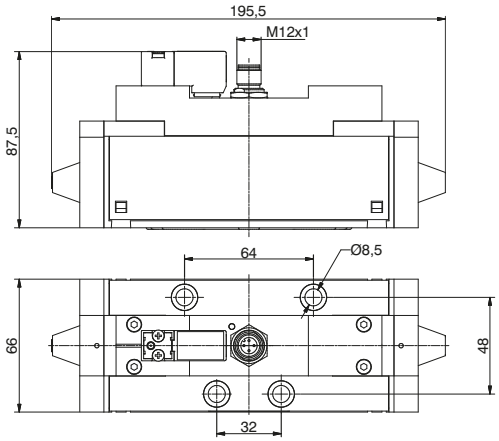

Weight 1360 g

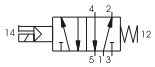

Solenoid-Differential

Coding: 1113.52.3.6.Ⓣ

Operational characteristics	
Fluid	Filtered air. No lubrication needed, if applied it shall be continuous
Max working pressure (bar)	10
Minimum piloting pressure (bar)	2
Temperature °C	-5 ÷ +50
Flow rate at 6 bar with Δp=1 (Nl/min)	3600
Responce time according to ISO 12238, activation time (ms)	78
Responce time according to ISO 12238, deactivation time (ms)	180

Shifting time of pneumatic directional control valves or moving parts, logic devices were measured in accordance to ISO 12238:2001

Ⓣ	COIL VOLTAGE
	12P = 24VDC

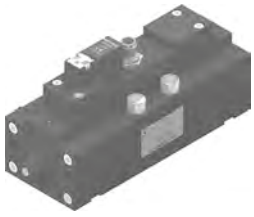

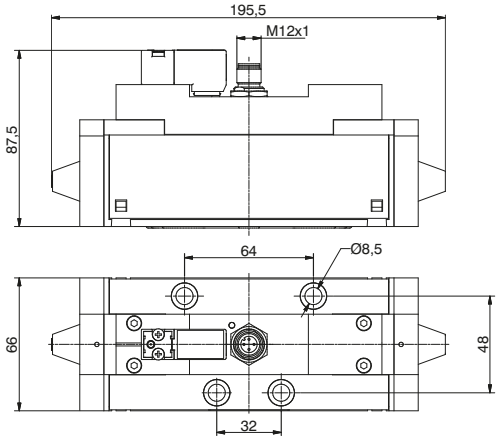

Weight 1360 g

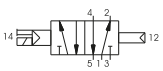

Solenoid-Solenoid 5/2

Coding: 1113.52.3.5.Ⓣ

Operational characteristics	
Fluid	Filtered air. No lubrication needed, if applied it shall be continuous
Max working pressure (bar)	10
Minimum piloting pressure (bar)	1.5
Temperature °C	-5 ÷ +50
Flow rate at 6 bar with Δp=1 (Nl/min)	3600
Responce time according to ISO 12238, activation time (ms)	32
Responce time according to ISO 12238, deactivation time (ms)	37

Shifting time of pneumatic directional control valves or moving parts, logic devices were measured in accordance to ISO 12238:2001

Ⓣ	COIL VOLTAGE
12P =	24VDC

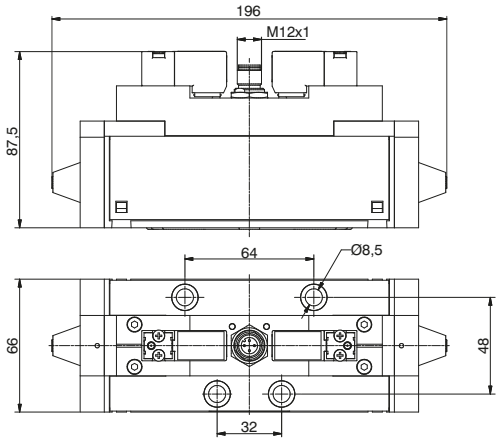

Weight 1370 g

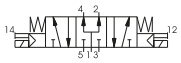

Solenoid-Solenoid 5/3

Coding: 1113.53.Ⓕ.3.5.Ⓣ

Operational characteristics	
Fluid	Filtered air. No lubrication needed, if applied it shall be continuous
Max working pressure (bar)	10
Minimum piloting pressure (bar)	3
Temperature °C	-5 ÷ +50
Flow rate at 6 bar with Δp=1 (Nl/min)	3600
Responce time according to ISO 12238, activation time (ms)	30 (Closed centres) 30 (Open centres) 32 (Pressured centres)
Responce time according to ISO 12238, deactivation time (ms)	305 (Closed centres) 230 (Open centres) 270 (Pressured centres)

Shifting time of pneumatic directional control valves or moving parts, logic devices were measured in accordance to ISO 12238:2001

Ⓣ	COIL VOLTAGE
12P =	24VDC

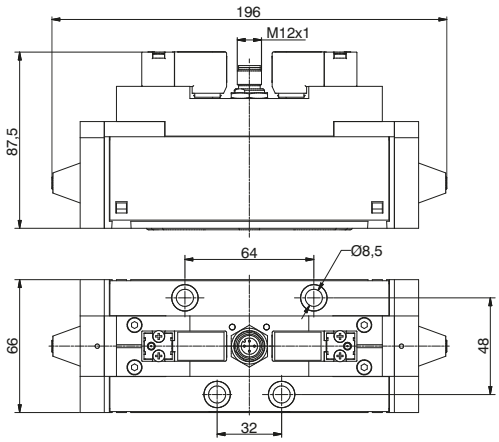

Weight 1380 g