Female pinion version

Ordering code
1330.Ø.*.01 magnetic **1331.Ø.*.01** non magnetic **1330.Ø.*.01R** magnetic with rotating adjustment angle **1331.Ø.*.01R** non magnetic with rotating adjustment angle * = rotating angle

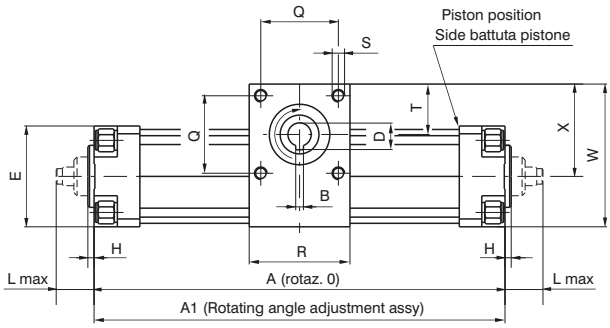

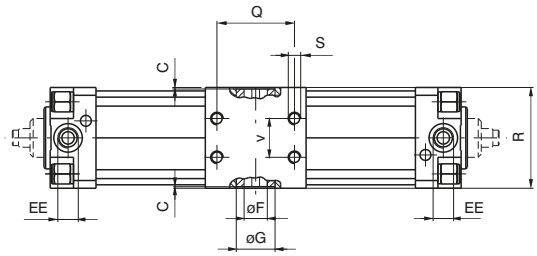

Male pinion version

Ordering code
1332.Ø.*.01 magnetic **1333.Ø.*.01** non magnetic **1332.Ø.*.01R** magnetic with rotating adjustment angle **1333.Ø.*.01R** non magnetic with rotating adjustment angle * = rotating angle

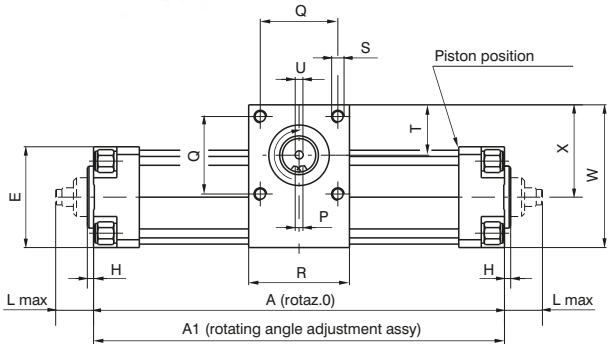

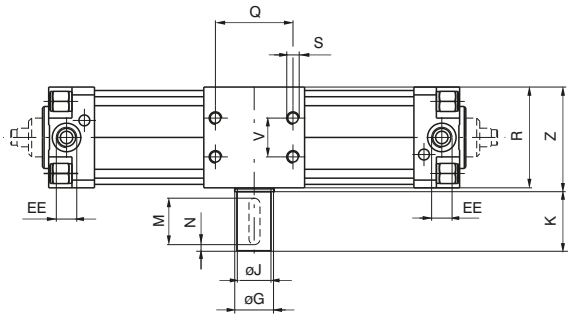

Dimensions

Bore		32	40	50	63	80	100
A rot. 0°		171	195	202	233	268	300
A rot. 90°		218	252	265	308	378	427
A rot. 180°		265	308	328	382	488	555
A rot. 270°		312	364	390	457	598	682
A rot. 360°		359	421	453	531	708	809
A1 rot. 0°		174	198	206	237	274	307
A1rot. 90°		221	255	269	312	384	434
A1 rot. 180°		268	311	332	386	494	562
A1 rot. 270°		315	367	394	461	604	689
A1 rot. 360°		362	424	457	535	714	816
B		5	5	5	6	6	8
C		1	1	1	1	1	1
D		17,3	17,3	17,3	20,8	22,8	28,3
E		46	52	65	75	95	115
Ø F (H 7)		15	15	15	18	20	25
Ø G		25	25	25	30	40	55
H		4	4	4	4	4	4
Ø J (h 7)		14	14	22	25	30	35
K		30	30	40	40	50	50
L max.		23	23	28,5	28,5	34,5	34,5
M		25	25	35	35	45	45
N		2,5	2,5	2,5	2,5	2,5	2,5
P		5	5	6	8	8	10
Q		33	40	50	60	80	80
R		50	60	65	75	100	115
S		M6	M6	M8	M8	M10	M10
T		27,5	35	32,5	35,5	50	54,5
U		M5	M5	M6	M8	M8	M10
V		18	22	25	35	50	60
W		71	85	92	105	141	162
X		48	59	59,5	67,5	93,5	104,5
Z		51	61	66	76	101	116
EE		G 1/8"	G 1/4"	G 1/4"	G 3/8"	G 3/8"	G 1/2"
Piston stroke every 10 ° of rotation		2,61	3,14	3,49	4,14	6,11	7,07
Female Pinion weight g	rot. 90°	1450	2020	3050	4850	10000	14900
	rot. 180°	1600	2240	3350	5350	11000	16350
	rot. 270°	1750	2460	3650	5850	12000	17800
	rot. 360°	1900	2680	3950	6350	13000	19250
Male Pinion weight g	rot. 90°	1550	2150	3280	5150	10500	15700
	rot. 180°	1700	2370	3580	5650	11500	17150
	rot. 270°	1850	2590	3880	6150	12500	18600
	rot. 360°	2000	2810	4180	6650	13500	20050

Magnetic sensors

Sensors 1500._, RS._, HS._ series
Mounting brackets codes 1320._(A, B, C)

Sensor brackets

Sensor brackets codes 1500._, RS._, HS._	Sensor brackets codes 1595.HAP	Bore	L
Code	Code		
1320.A	1320.ASC	Ø32	60
		Ø40	65
1320.B	1320.BSC	Ø50	77
		Ø63	87
1320.C	1320.CSC	Ø80	105
		Ø100	125
1320.D	1320.DSC	Ø125	145
1320.E	1320.ESC	Ø160	184
1320.F	1320.FSC	Ø200	222

Sensor brackets codes 1580._, MRS._, MHS._		
Code	Bore	L1
1320.AS	Ø32	48
	Ø40	54
1320.BS	Ø50	66
	Ø63	76
1320.CS	Ø80	96
	Ø100	112
1320.DSC	Ø125	145
1320.ESC	Ø160	184
1320.FSC	Ø200	222

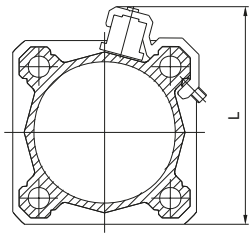

Sensors 1500._,RS._,HS._

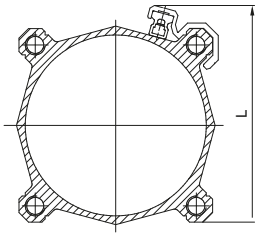

Sensors 1595.HAP

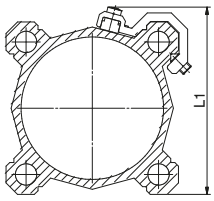

Sensors 1580._, MRS._, MHS._

Sensors for microbore cylinders: for technical characteristics and ordering codes see "Magnetic sensors" section

Solenoid valves supports

This accessory permits to mount a valve or an electrovalve on a side of the cylinder. The plate can be fitted on the cylinder profiled barrel, and, on it, can be mounted either a threaded distributor or a base on whic can be mounted an ISO distributor. Once installed the connections must be done with fittings and pipes. All of the threaded holes on the support plate are dedicated to different valves series as per attached drawing.

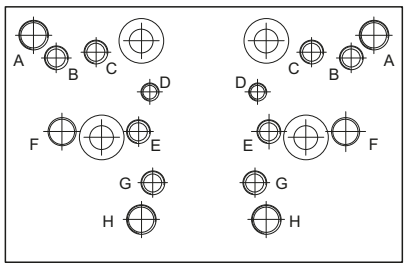

Fixing holes for valves series:

A = 414/2
B = 824
C = 828, T488, 488, 484
D = 2400
E = 2600
F = Bases for ISO distributors
G = 858/2
H = T424

Ordering code
1320.15 (Ø32 - Ø40) **1320.16** (Ø50 - Ø63) **1320.17** (Ø80 - Ø100) **1320.18** (Ø125) **1320.19** (Ø160) **1320.20** (Ø200)

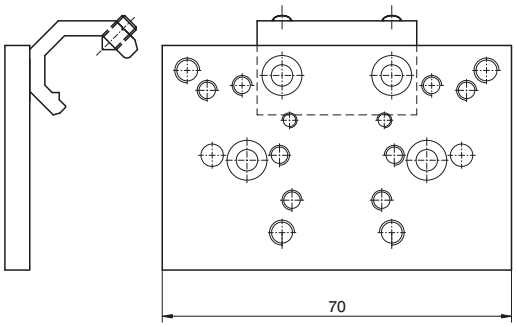

Bases for ISO solenoid valves

Ordering code

1320.21	bases for ISO 1 solenoid valves
1320.22	bases for ISO 2 solenoid valves

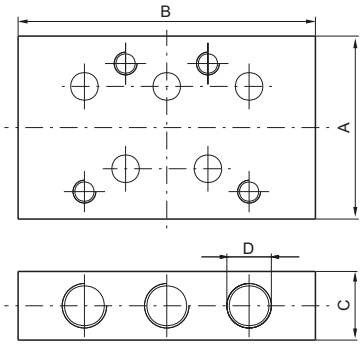

		Dimensions			
		A	B	C	D
1320.21	bases for ISO 1 solenoid valves	40	75	15	G 1/8"
1320.22	bases for ISO 2 solenoid valves	50	95	20	G 1/4"

Series 6400 - Rotary actuators

General

These rotary actuators convert linear motion of a piston into a rotary motion via a rack and pinion device, using a single pinion-rack system for the 6411 version and a double system on 6400 versions. The 6410 series actuators have fixed stops at 90 and 180 degrees; while on the 6400 series, rotation can be adjusted between 0 and 190 degrees using variable stops that can also be substituted with hydraulic stoppers (shock absorbers). These devices are equipped with a rotating table upon which the load is fixed.

Double rack rotary actuators with turn table

Ordering code

6400. _ . _

- **A** = Standard
- **R** = Cushioning (shock absorber)

- **10** (piston ø15)
- **30** (piston ø20)
- **50** (piston ø25)
- **100** (piston ø32)
- **200** (piston ø40)

Construction characteristics

Body	anodised aluminium
End cap	anodised aluminium
Piston seal	NBR rubber
Pinion	steel
Rack	steel
Turn table	anodised aluminium
Cushioning	elastic bumper (hydraulic damper available on request)

Operational characteristics

Fluid	Filtered air. No lubrication needed, if applied it shall be continuous.)
Max. pressure	10 bar (for type 100 and 200, 6 bar)
Working temperature	-5°C - +70°C
Rotation angle range	0 - 190°
Max. rotation	190°
Rotation speed	s/90° (see rotation time table)

Overall dimensions

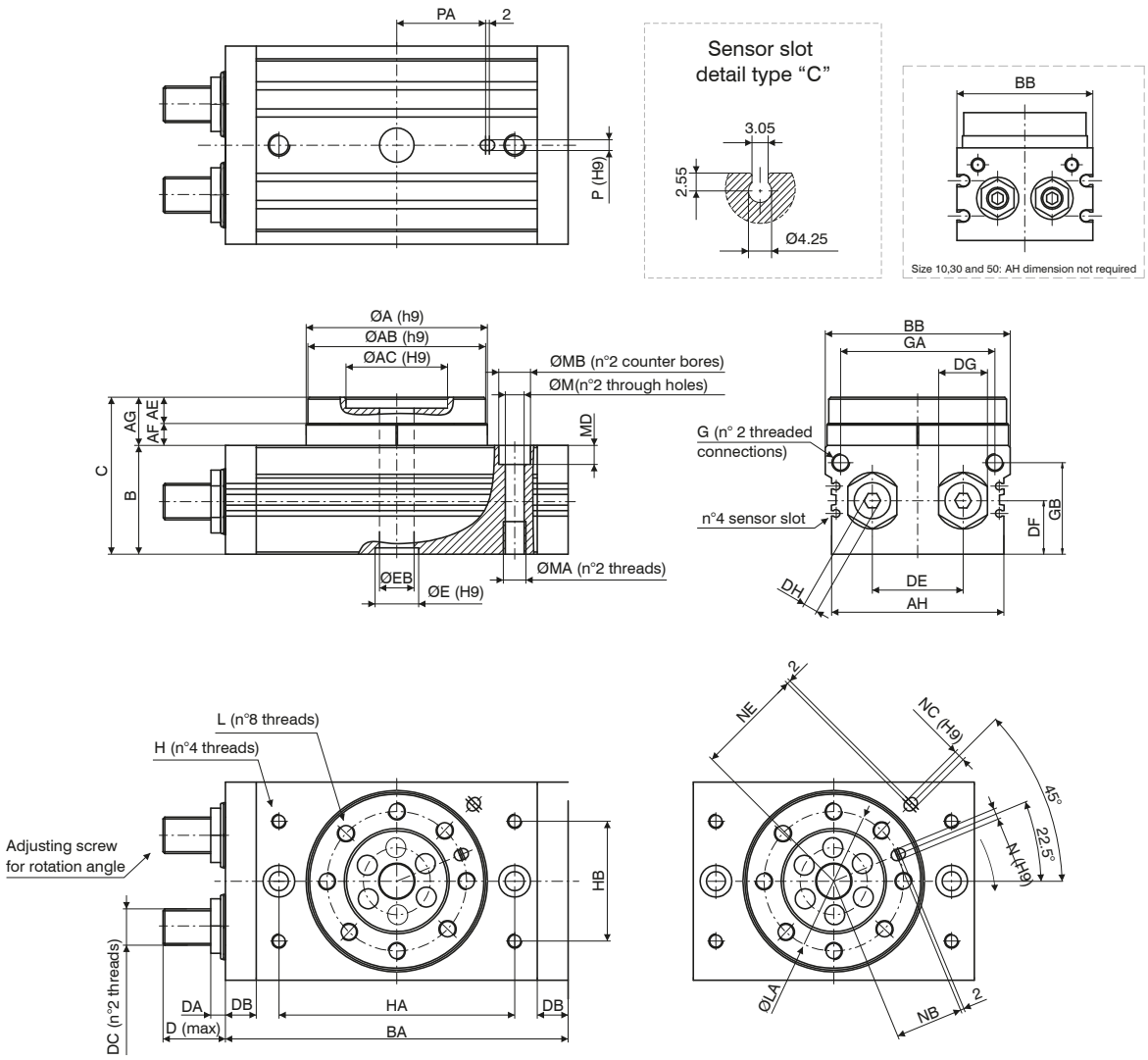

Size		10	30	50	100	200
Ø piston		Ø15	Ø21	Ø25	Ø32	Ø40
ØA h9		46	67	77	100	118
ØAB h9		45	65	75	98	116
ØAC H9		20	32	35	56	64
	Useful depth	4	4,5	5	6	9
AE		8	10	12	14,5	16,5
AF		5	7	8	12,5	15,5
AG		13	17	20	27	32
AH		/	/	/	95	114
B +0,5 / 0		34	40	46	59	74
BA		92	127	152	189	240
BB +0,5 / 0		50	70	80	102	120
C +0,5 / 0		47	57	66	86	106
D		17,7	25	31,4	34,3	40,2
DA		8,6	10,6	14	8	20
DB		9,5	12	15,5	17	24
DC		M8x1	M10x1	M14x1,5	M20x1,5	M27x1,5
DE		20	29	38	50	60
DF		15,5	18,5	22	29,5	36,5
DG		12	14	19	27	36
DH		4	5	6	8	10
ØE H9		15	22	26	24	32
	Useful depth	3	3	3	3,5	5,5
ØEB		5	9	10	19	24
G		M5x0,8	G1/8	G1/8	G1/8	G1/8

Size		10	30	50	100	200
Ø piston		Ø15	Ø21	Ø25	Ø32	Ø40
GA		34,5	50	63	85	103
GB		27,8	32	37,5	50,5	65,5
H		M5x0,8	M6x1	M8x1,25	M8x1,25	M12x1,75
	Useful depth	8	8	8	10	13
HA		60	84	100	130	150
HB		27	37	50	66	80
L		M5x0,8	M6x1	M8x1,25	M10x1,5	M12x1,75
	Useful depth	8	10	12	14,5	16,5
LA		32	48	55	77	90
M		6,8	8,6	10,5	10,4	14,2
MA		M8x1,25	M10x1,5	M12x1,75	M12x1,75	M16x2
	Useful depth	12	15	18	18	25
MB		11	14	18	17,5	20
MD		6,5	8,5	10,5	10,5	12,5
N H9		3	4	5	6	8
	Useful depth	3,5	4,5	5,5	6,5	8,5
NB		15	23	26,5	37,5	44
NC H9		/	/	/	6	8
	Useful depth	/	/	/	4,5	4,5
NE		/	/	/	59	69
P H9		/	/	/	6	8
	Useful depth	/	/	/	4,5	6,5
PA		/	/	/	49	54
Weight (g)		530	1230	2080	4100	7650

Permissible Loads

		Size				
		10	30	50	100	200
Radial Load (N)		80	200	320	400	550
Axial Load (N)	Fc	80	370	450	710	1000
	Ft	75	200	300	500	750
Torque Moment (Nm)		2,5	5,5	9,5	18	25

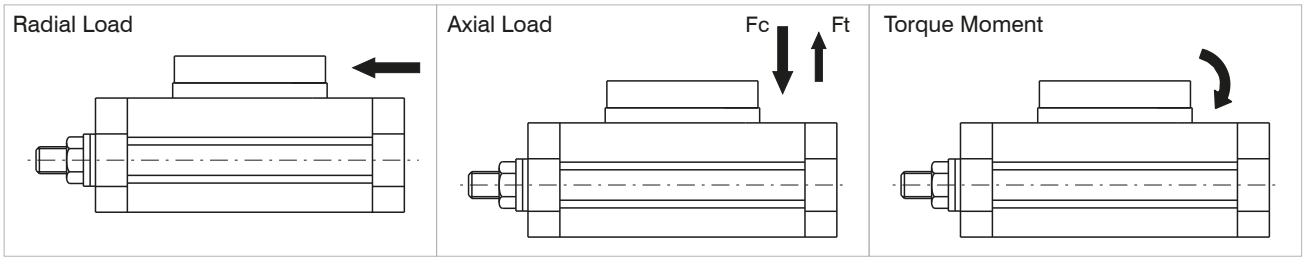

Torque Diagrams

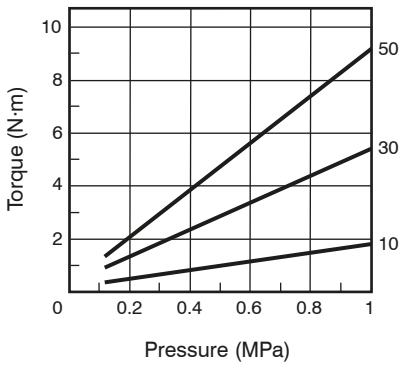

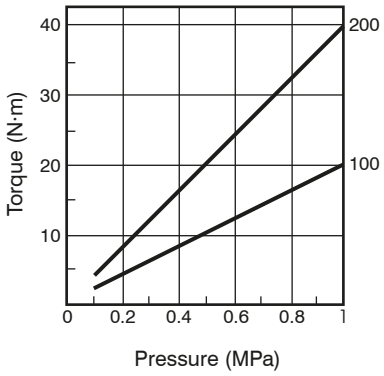

Rotation time (sec./90°)

Dimension	With adjusting screw	With hidraulic decelerator
10 - 30 - 50	0.2 - 1	0.2 - 0,7
100	0.2 - 2	0.2 - 1
200	0.2 - 2.5	0.2 - 1

Kinetic energy

Dimension	With adjusting screw	With hidraulic decelerator
10	0.006	Please apply to our tech-dpt for info (as general rule expressed valves can be multiplied by 3)
30	0.045	
50	0.08	
100	0.30	
200	0.52	

Single rack rotary actuators

Ordering code

6411.Ø. _

- **50**
- **63**
- **80**
- **100**

- **90** = rotation 90°
- **180** = rotation 180°

Construction characteristics

Body	anodised aluminium
Piston	aluminium
End cap	anodised aluminium
Piston seal	NBR rubber
Pinion	steel
Rack	steel

Operational characteristics

Fluid	Filtered air. No lubrication needed, if applied it shall be continuous.
Max. pressure	10 bar
Working temperature	-5°C - +70°C
Rotation tolerance	0° - +4°

Overall dimensions Ø50 and Ø63

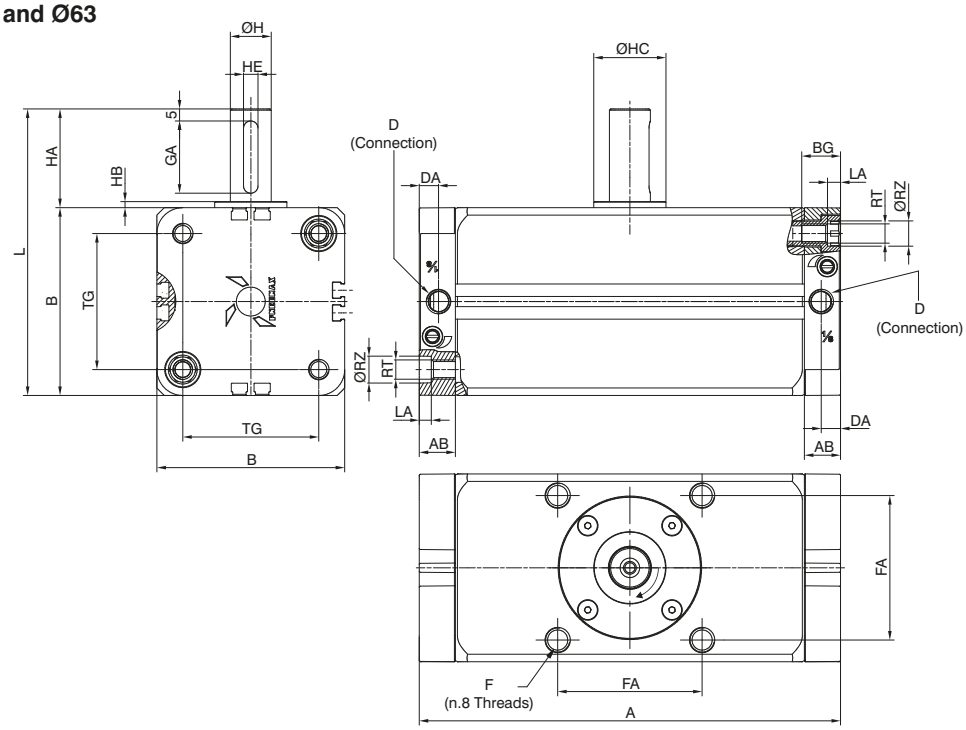

Overall dimensions Ø80 and Ø100

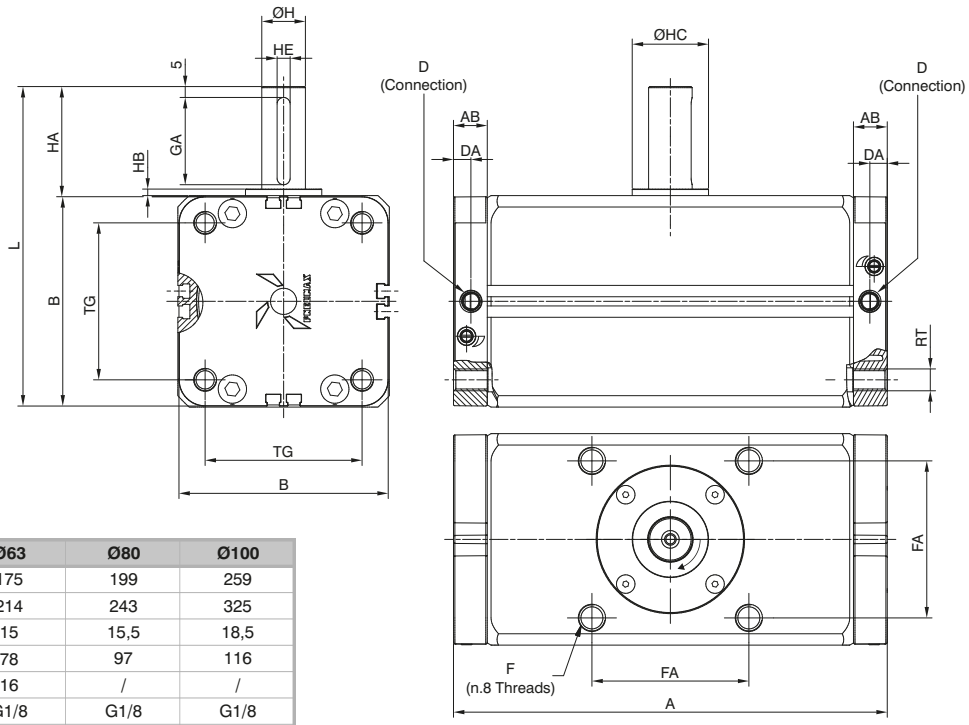

Bore		Ø50	Ø63	Ø80	Ø100
A	90°	156	175	199	259
	180°	189	214	243	325
AB		15	15	15,5	18,5
B		66	78	97	116
BG		16	16	/	/
D		G1/8	G1/8	G1/8	G1/8
DA		8	8	8	8
F		M8x1,25	M10x1,5	M12x1,75	M12x1,75
	Useful depth	12	15	15	18
FA		48	60	72	85
GA		25	30	40	45
H		15	17	20	25
HA		36	41	50	60
HB		2,5	2,5	3	4
HC		25	30	35	39,5
HE^{H9}		5	6	6	8
L		102	119	147	176
LA		5	5	/	/
RT		M8	M8	M10	M10
RZ		10,5	10,5	/	/
TG		46,5	56,5	72	89
Weight (gr.)	90°	1575	2451	4162	6989
	180°	1815	2823	4774	8329

Sensor slot
detail type "B"

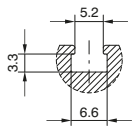

Usable sensors code
1590._
LRS._
LHS._

Allowable Loads

	Bore			
	Ø50	Ø63	Ø80	Ø100
Radial load (N)	200	300	400	600
Axial Load in compression (N)	500	600	900	1000
Tensile Axial Load (N)	200			

Compression
Axial Load

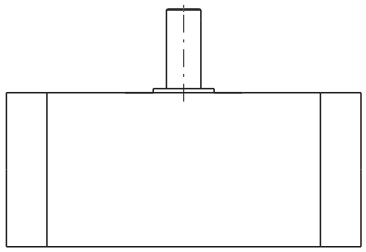

Tensile
Axial Load

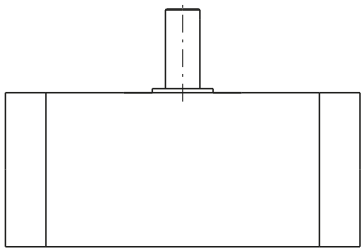

Radial Load

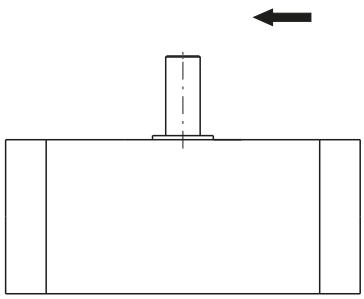

Torque Diagrams

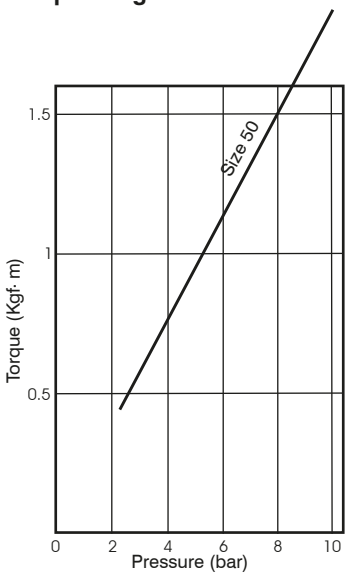

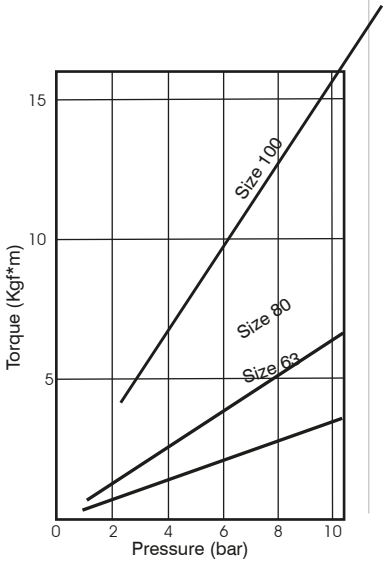

Max Kinetic energy (Kg·cm)
Kinetic energy (cushioning angle 35°)

Bore			
Ø50	Ø63	Ø80	Ø100
10	15	20	30

Rotation time according to inertial moments

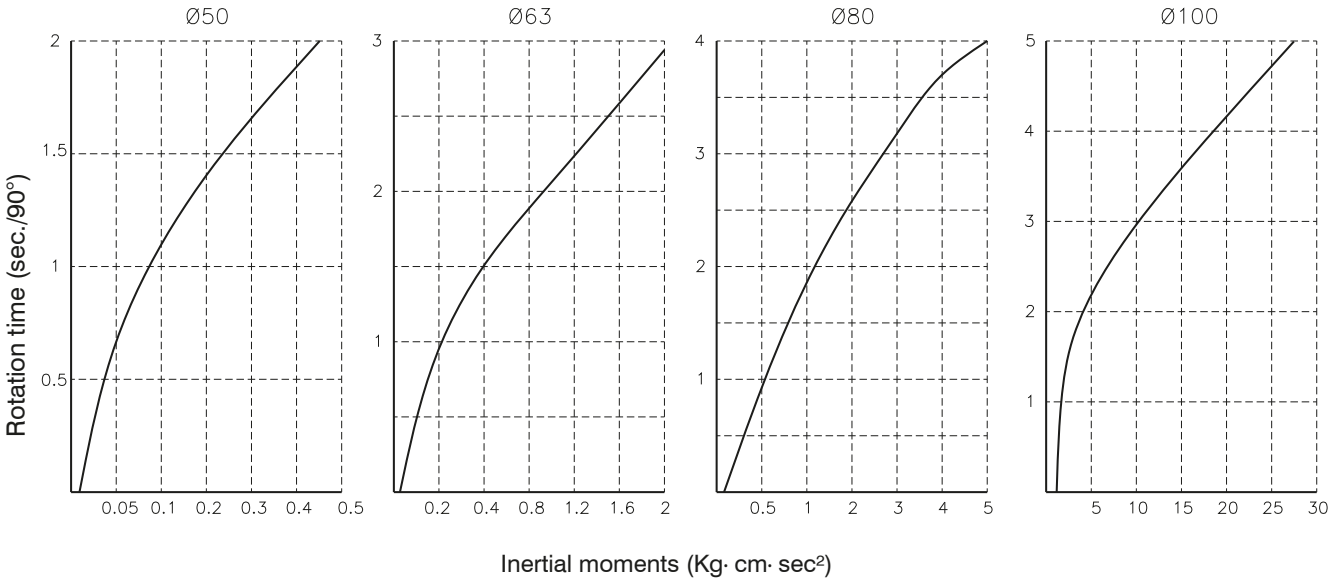

Foot (MS1)

Ordering code
1540.Ø.05/1F

The kit comprises:
n°1 foot (plated zinc steel)
n°2 screws (plated zinc steel)

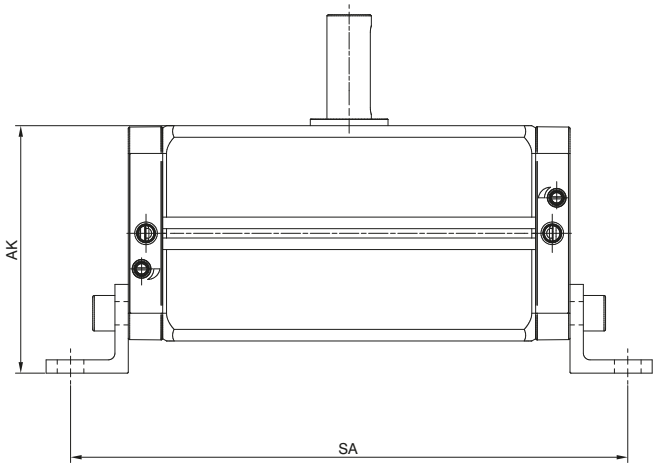

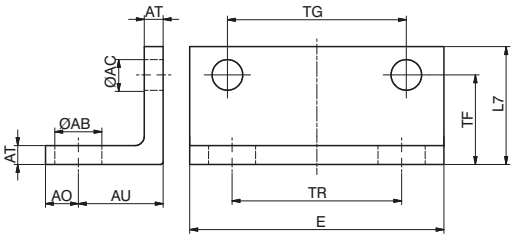

Bore		Ø50	Ø63	Ø80	Ø100
AK		78	89	111,5	132
SA	90°	198	217	251	313
	180°	231	256	295	379

Vane type rotary actuators

General

The vane type rotary actuators, 6420 series is designed to operate at 90-180 or 270 deg. In a contained space. Dimensionally are more compact than other types of rotary actuators.

The range includes bore sizes from 10 to 100 in 4 configurations:
- basic.
- with rotary angle adjustment mechanism.
- with sensing support.
- with rotary angle adjustment mechanism and sensing support.

The bodies are in aluminium , the shafts in chrome plated steel and the seals in NBR.
The sensing support kit enables for the sensors to be positioned in any position.
The rotary angle adjustment mechanism enables the adjustment of the complete rotation on bore sizes 10 to 40 while on the others sizes carries as standard hydraulic dampers which enable the adjustment only of the last part of the rotation.
The units can be fixed using the thread on the body or the through holes on the body.
On bore sizes 50 to 100 the shaft runs into ball bearings which ensure high resistence.o rotante è guidato su cuscinetti a sfere che assorbono i carichi radiali e assiali, garantendo durata e affidabilità. assiali, garantendo durata e affidabilità.

Ordering code

6420.Ø._._

Size
Ø10
Ø15
Ø20
Ø30
Ø40
Ø50
Ø63
Ø80
Ø100

Rotation angle
90 = 90°
180 = 180°
270 = 270°

Version
/ = Without adjustable rotation angle, and without sensor support
R = With adjustable rotation angle
S = With sensor supports
T = With adjustable rotation angle and sensor supports

Construction characteristics

Body	anodised aluminium
Rod	steel
Seals	NBR
Vane	vulcanized NBR rubber on steel core
Cushoning	elastic bumper; hydraulic dampers from size Ø50 - Ø100 versions R or T

Operational characteristics

Fluid	Filtered air. No lubrication needed, if applied it shall be continuous.
Working pressure	1,5 - 7 bar
Temperature	0°C - 50°C
Rotation range	90° - 180° - 270°
Max. allowed leak	Ø10 - Ø40 = 0,3 Nl/min / Ø50 - Ø100 = 0,5 Nl/min

Overall dimensions Ø10 - Ø40

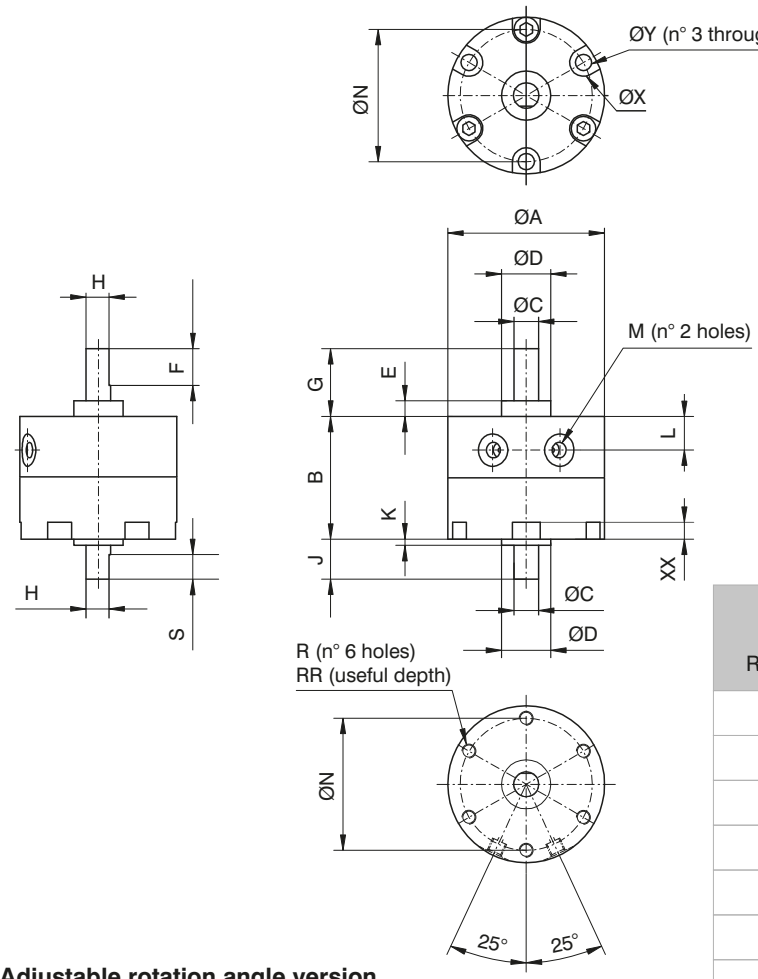

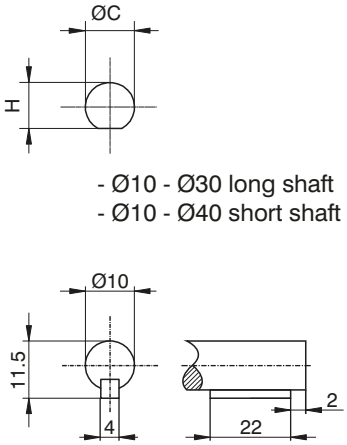

- Ø10 - Ø30 long shaft
- Ø10 - Ø40 short shaft

- Ø40 long shaft

Adjustable rotation angle version

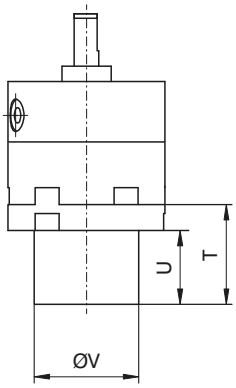

With sensor support version

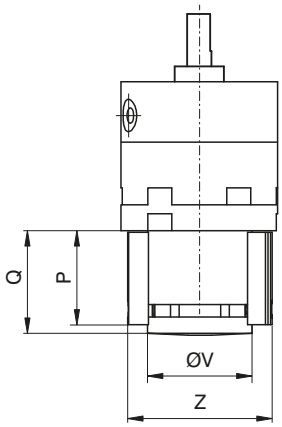

Bore - Rotation	10 - 90° / 10 - 180° / 10 - 270°	15 - 90° / 15 - 180° / 15 - 270°	20 - 90° / 20 - 180° / 20 - 270°	30 - 90° / 30 - 180° / 30 - 270°	40 - 90° / 40 - 180° / 40 - 270°
ØA	30	35	44	51	64
B	17	20,1	29,1	40	45
ØC	4	5	6	8	10
ØD	9	12	14	16	25
E	3	4	4,5	5	6,5
F	9	10	10	12	22
G	14	18	20,3	22	30
H	3,5	4,5	5,5	7,5	9
J	8	9	9,6	13	15
K	1	1,5	1,6	2	4,5
L	4,2	5	8,5	11	9,5
M	M5x0,8	M5x0,8	M5x0,8	M5x0,8	M5x0,8
ØN	24	29	36	43	56
P	23,3	28	28	30,8	33
Q	24	29,5	30,5	34	36
R	M3x0,5	M3x0,5	M4x0,7	M5x0,8	M5x0,8
RR	3	3	4,5	9	9
S	5	6	7	8	9
T	24	28	28,5	32,5	34,5
U	18	22	21	24	26
ØV	18	24	30	34	34
ØX	6	6	7,5	9	9
XX	3,5	3,5	4,5	5,5	5,5
ØY	2,3	2,3	3,2	4,2	4,2
Z	29	34	42	47	47
Weight (g) Base	28	48	112	200	342
Weight (g) With regulation rotation system	78	116	240	390	805

Overall dimensions Ø50 - Ø100

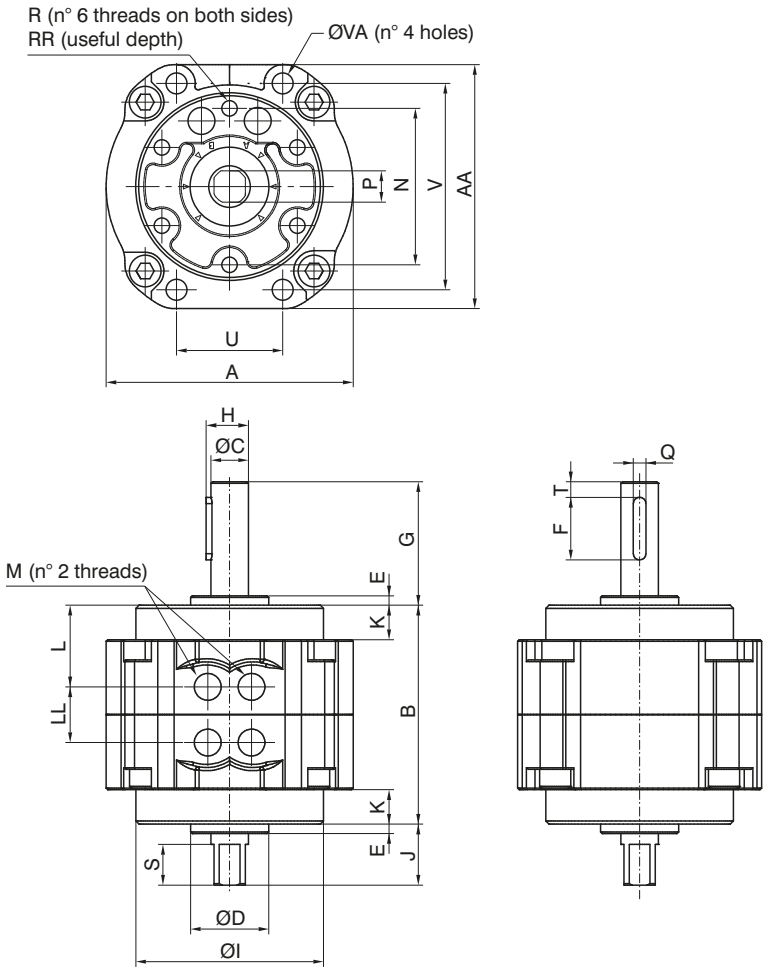

Adjustable rotation angle version

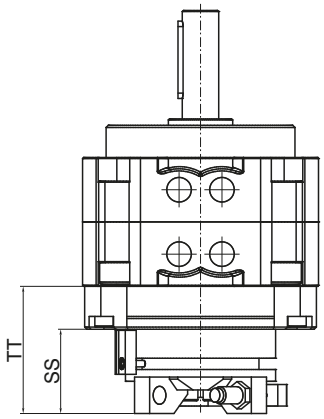

With sensor support version

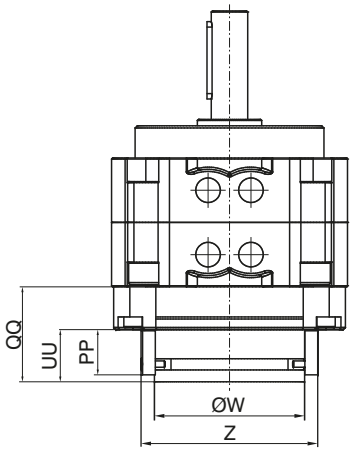

Bore - Rotation	50 - 90°	63 - 90°	80 - 90°	100 - 90°
	50 - 180°	63 - 180°	80 - 180°	100 - 180°
	50 - 270°	63 - 270°	80 - 270°	100 - 270°
A	79	98	110	140
AA	78	98	110	140
B	70	80	90	103
ØC	12	15	17	25
ØD	25	28	30	45
E	3	3	3	4
F	20	25	36	40
G	39,5	45	53,5	65
H	13,5	17	19	29
ØI	60	75	88	108
J	19,5	21	23,5	30
K	11	14	15	11,5
L	26	28,9	30	35,4
LL	18	22,2	30	32,2
M	G1/8"	G1/8"	G1/4"	G1/4"
N	50	60	70	80
P	10	12	13	19
PP	21	21	21	21
Q	4	5	5	7
QQ	39,4	43	44	48,5
R	M6x1	M8x1,25	M8x1,25	M10x1,5
RR	8	10	14	14
S	13	14	16	16
SS	38	38	39	39,5
T	5	7,5	5	5
TT	53	56,5	59	63
U	34	39	48	60
UU	24,5	24,5	24,5	24,5
V	66	83	94	120
ØVA	6,5	9	9	11
ØW	60	60	70	70
Z	73	73	83	83
Weight (g) Base	760	1290	1920	4100
Weight (g) With regulation rotation system	1100	1690	2370	4840

Key flat position and adjustable rotation angle Ø10 - Ø40

ROTATING SHAFT KEY FLAT POSITION

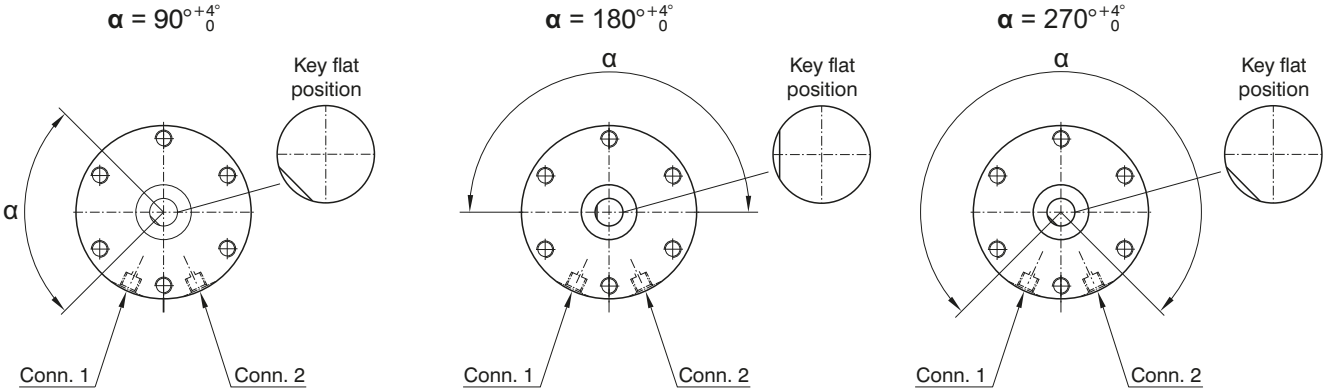

ROTATION ANGLE SETUP

To regulate the rotation angle (codes 6420..R or T), follow the instructions below

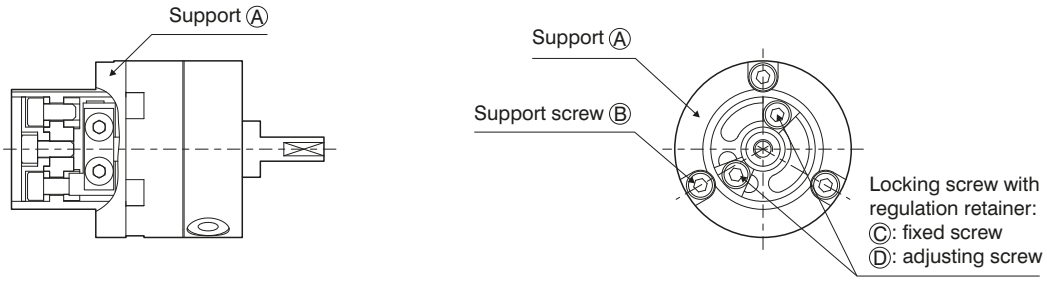

Phase 1 : Choose the regulation configuration based on the following options (consider the actuator base position):
rotation 90°, regulation 0 - 90°, rotation 180°, regulation 0 - 180°, rotation 270°, regulation 0 - 175°

ROTATION CONFIGURATION

90°

Standard version — from 0° to 90°

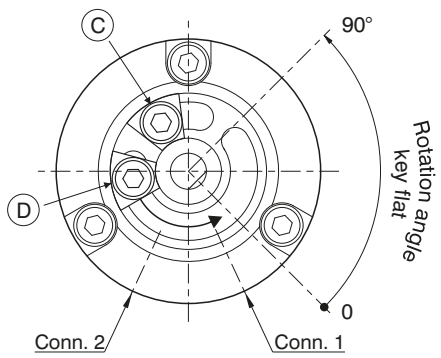

from 90° to 0°

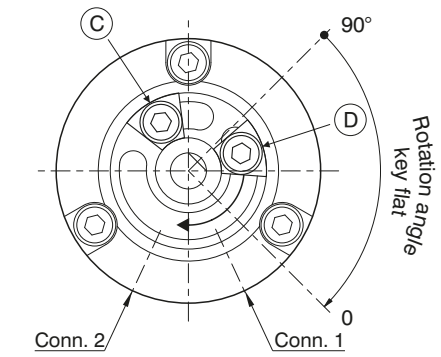

ROTATION CONFIGURATION

180°

Standard version — from 0° to 180°

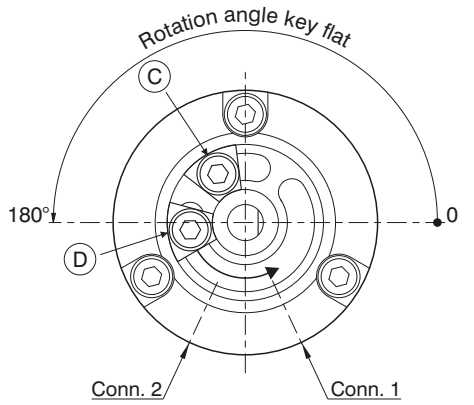

from 180° to 0°

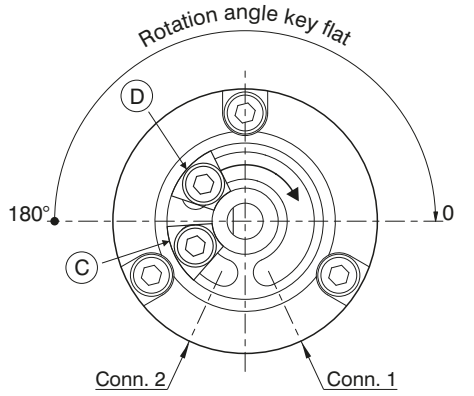

Key flat position and adjustable rotation angle Ø10 - Ø40

ROTATION CONFIGURATION

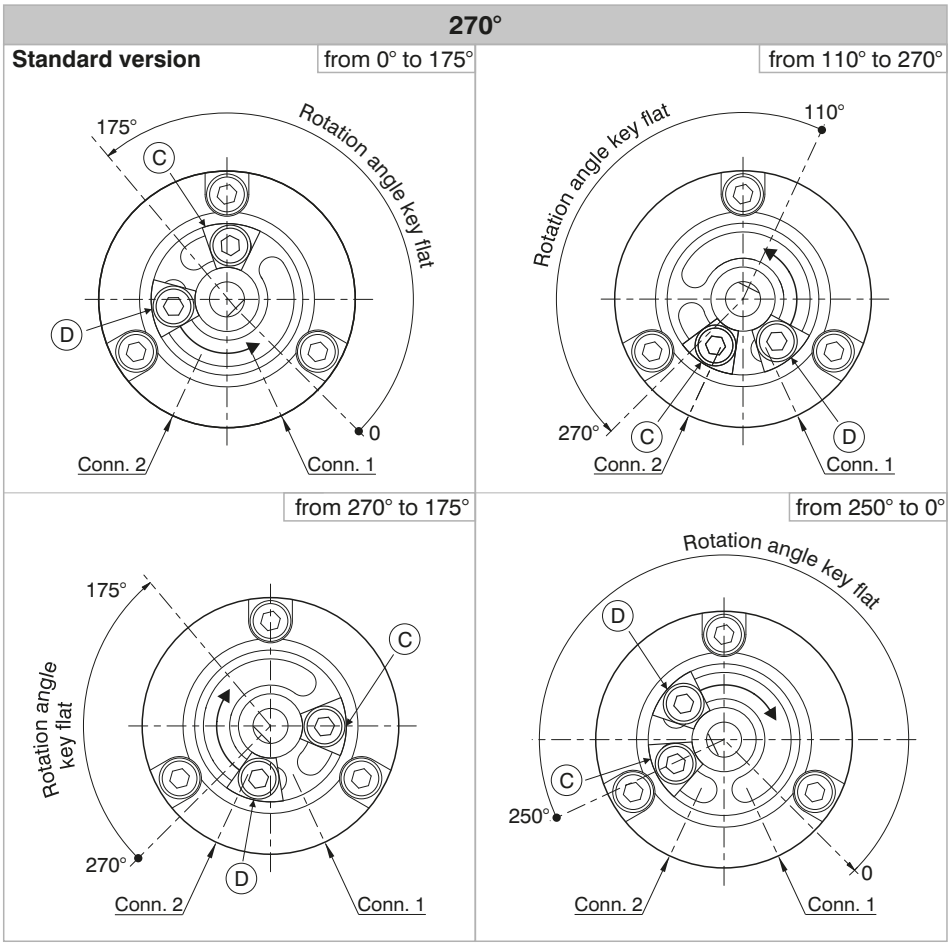

Ⓒ = **Fixed screw** Ⓓ = **Adjusting screw**

Phase 2 : If the desired settings do not correspond to the basic version settings:
- remove screw Ⓔ and disk Ⓕ or Ⓖ (depending on the version) (see figure 1)
- remove screws Ⓑ, the actuator support Ⓐ (see figure 1) and unlock blocking screws Ⓒ and Ⓓ (see rotation configuration)
- position screws Ⓒ and Ⓓ and the key flat of rotating shaft as indicated in the chosen rotation configuration in order to align the key flat of rotating shaft (see figure 2)
- re-assemble actuator support Ⓐ, tighten screws Ⓑ
- position screws Ⓒ and Ⓓ according to the desired adjustment and tighten the screws
- re-assemble disk Ⓕ or Ⓖ and screw Ⓔ

Figure 1

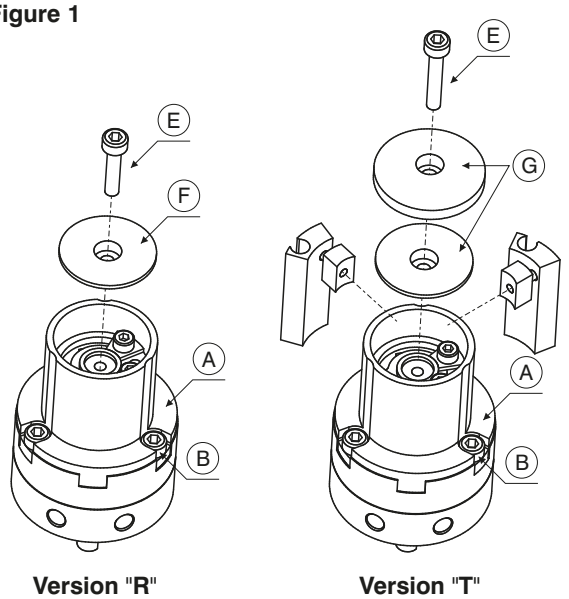

Figure 2

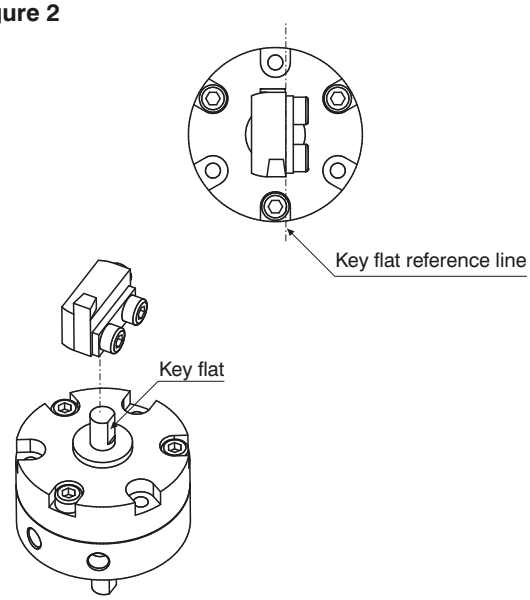

Spline position and adjustable rotation angle Ø50-Ø100

ROTATING SHAFT SPLINE POSITION

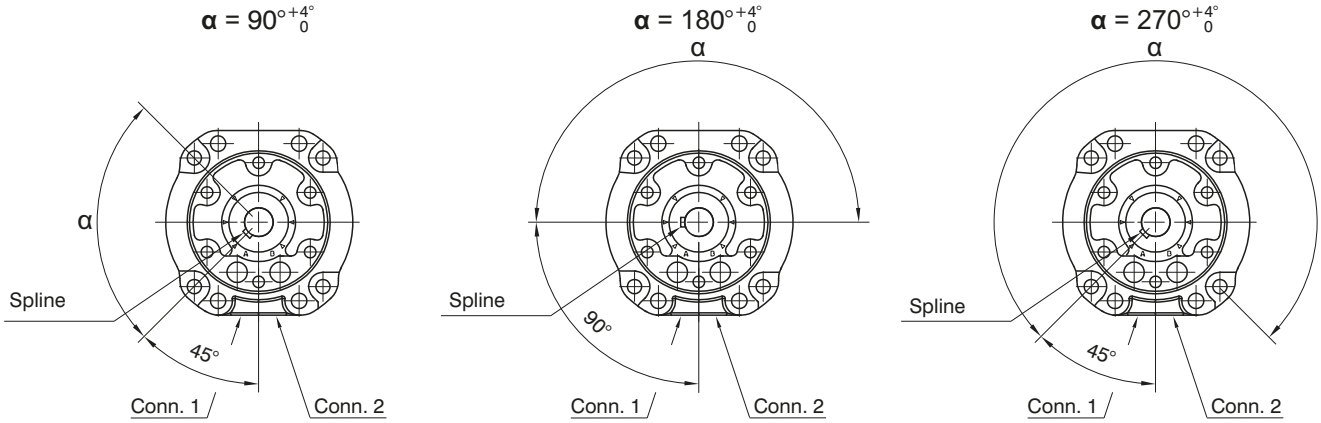

ROTATION ANGLE SETUP

The version with adjustable rotation angle (cod. 6420..R or T) is available with hydraulic dampers which enable to regulate the rotation angle by 15° and to decelerate moving mass.

Example: for 90° rotation and 15° regulation per decelerator, the effective rotation angle is 60°
Example: for 180° rotation and 15° regulation per decelerator, the effective rotation angle is 150°
Example: for 270° rotation and 15° regulation per decelerator, the effective rotation angle is 240°

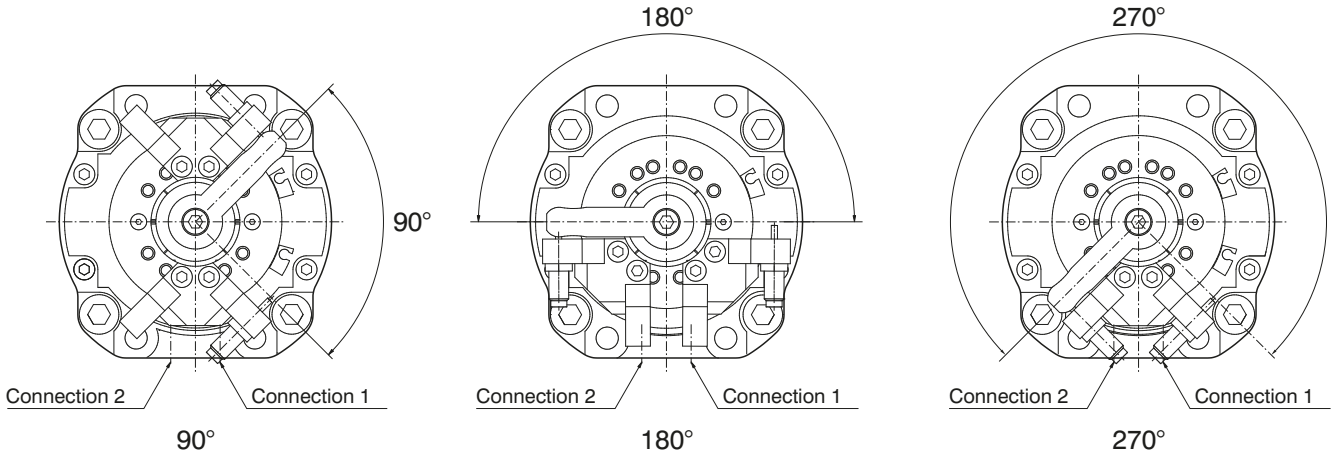

Switch positioning instructions Ø10 - Ø40

Phase 1 - Unfasten screw Ⓐ
Phase 2 - Assemble the switch Ⓒ into the dedicated housing Ⓑ and lock with screw Ⓓ
Phase 3 - Rotate block Ⓑ in the desired position (see following image)

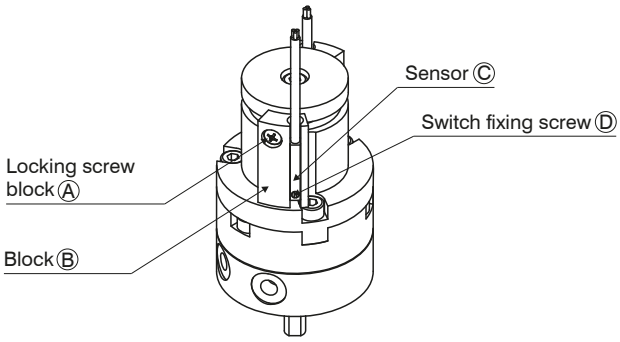

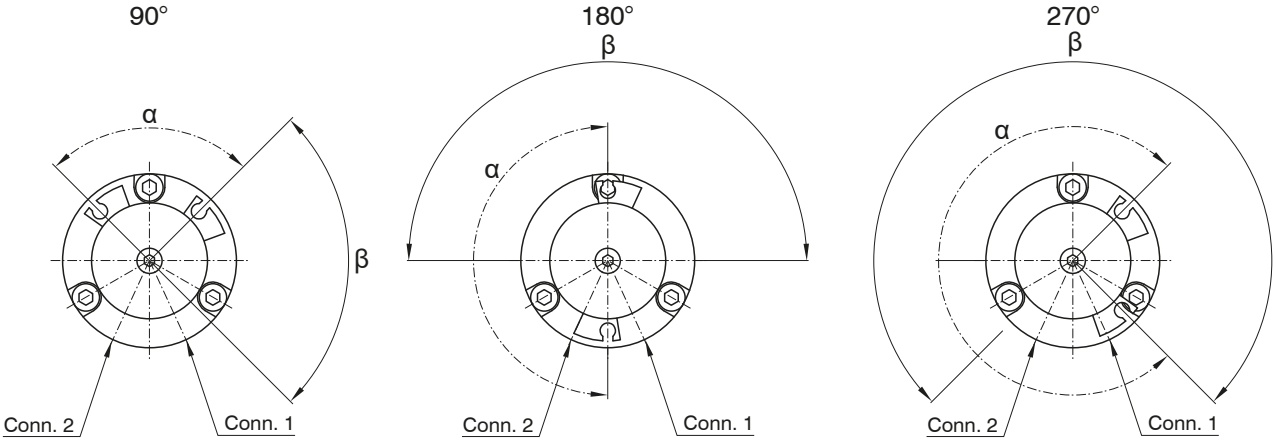

α - magnet rotating angle
β - shaft key flat rotating angle
For correct functionality position the switch within angle **α**

Phase 4 - tighten screw Ⓐ
Phase 5 - repeat the following phases for the second switch

AVAILABLE SENSORS

Code
1581.U
TRS.U
1581.HAP
THS.P

Code
1583.DC
1583.HAP
THR.P

Switch positioning instructions Ø50 - Ø100

Phase 1 - Unfasten screw (A)
Phase 2 - Assemble the switch (C) into the dedicated housing (B) and lock with screw (D)
Phase 3 - Rotate block (B) in the desired position (see following image)

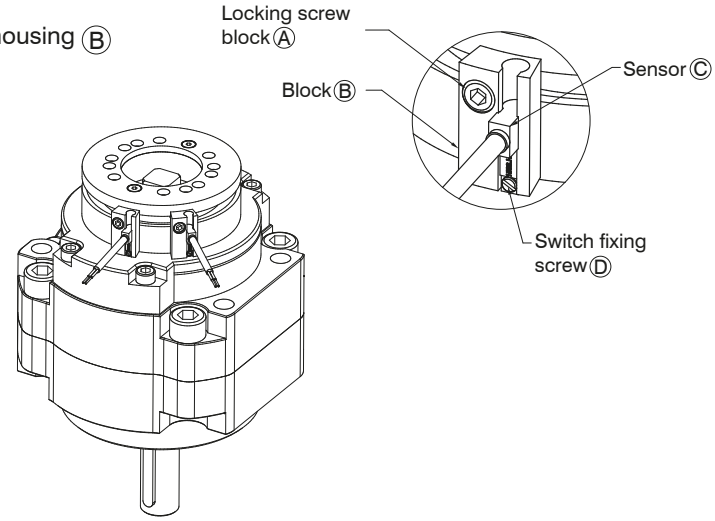

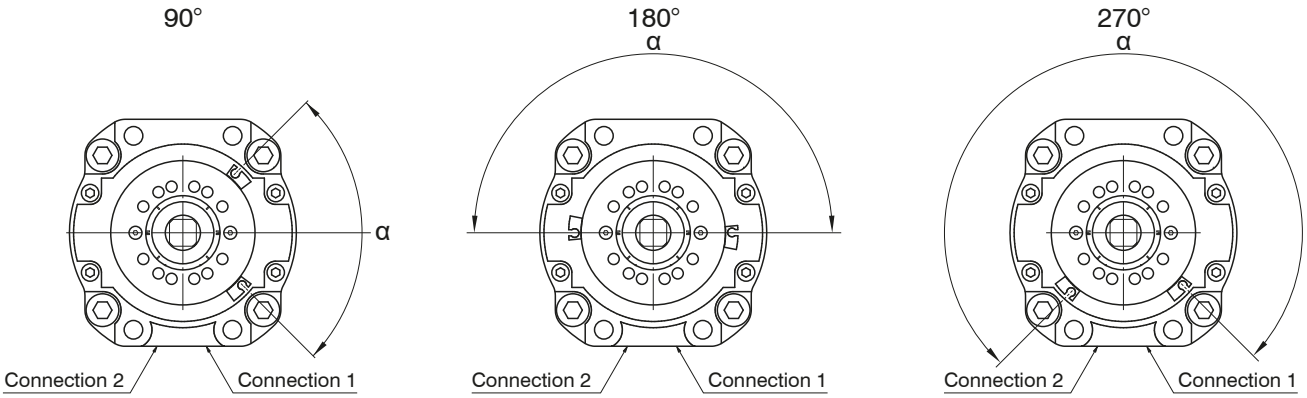

α - magnet rotating angle (that corresponds to the shaft key flat rotating angle)
For correct functionality position the switch within angle **α**

Phase 4 - tighten screw (A)
Phase 5 - repeat the following phases for the second switch

AVAILABLE SENSORS

	Code
	**1583.DC**
	1583.HAP
	THR.P

Available torques

Ø10

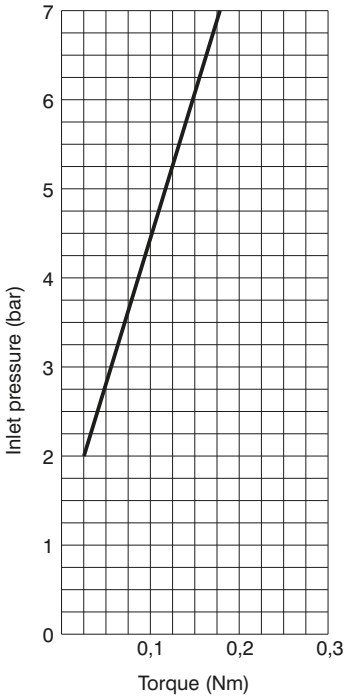

Ø15

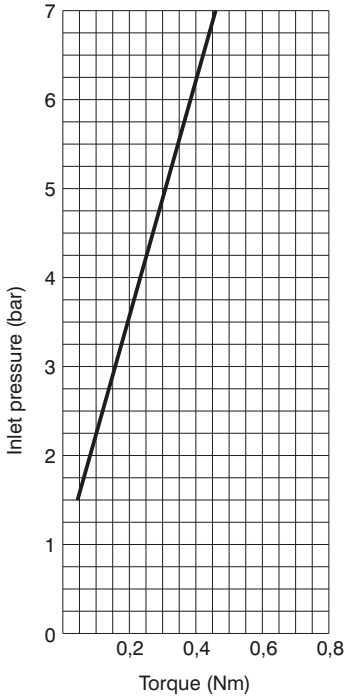

Ø20

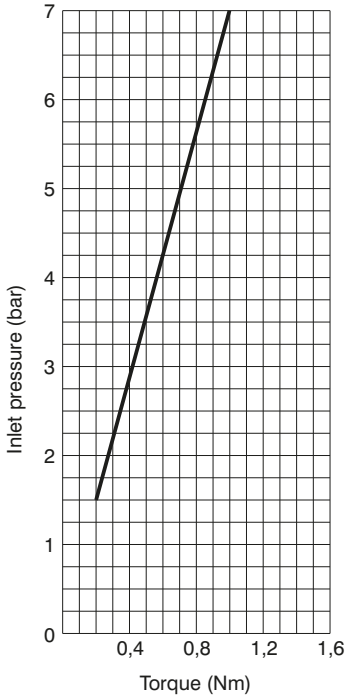

Ø30

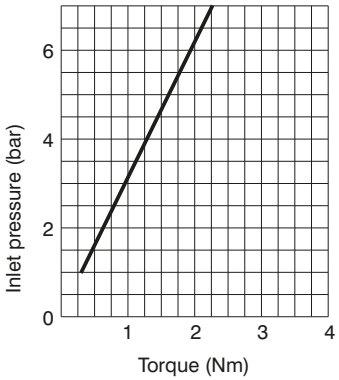

Ø40

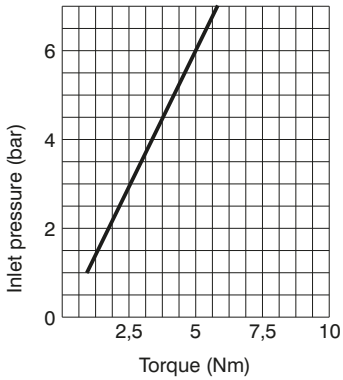

Ø50

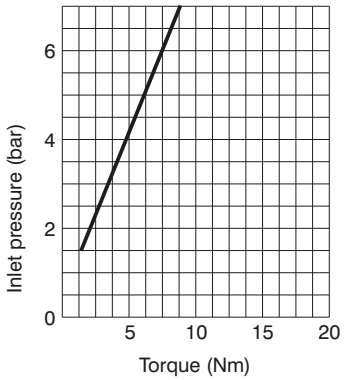

Ø63

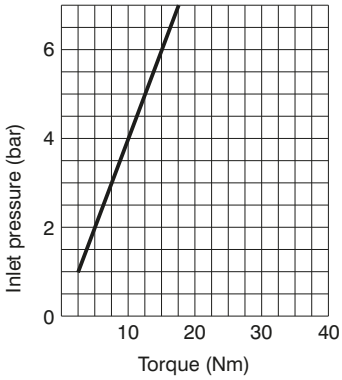

Ø80

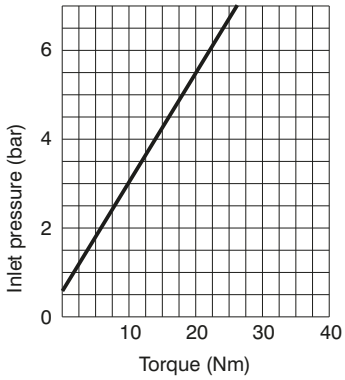

Ø100

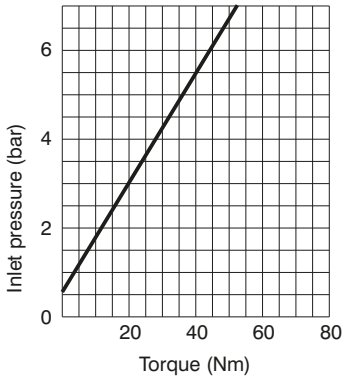

Direct mounting

Mounting types

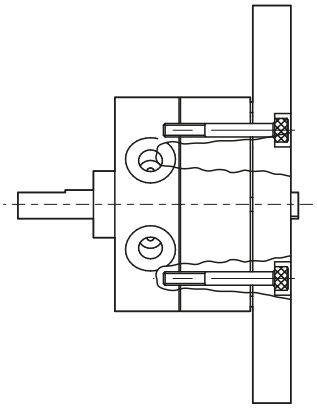

Rear mounting

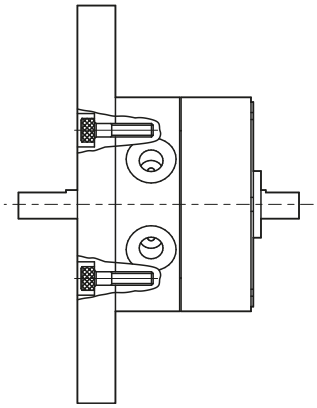

Frontal mounting

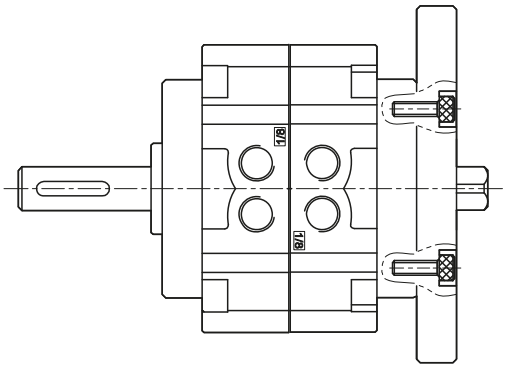

Rear mounting

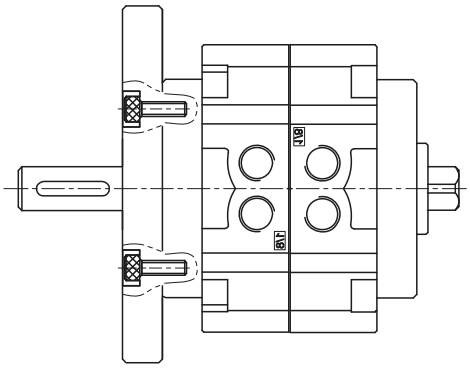

Frontal mounting

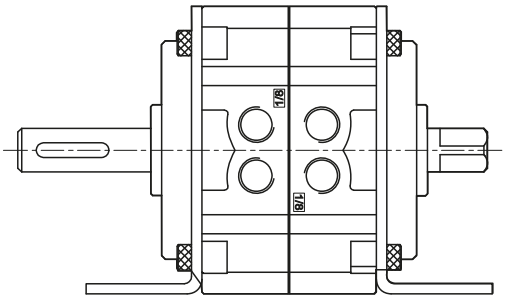

Mounting with flange